深圳市拓普微科技开发有限公司

SHENZHEN TOPWAY TECHNOLOGY CO., LTD.

LMT080DIEFWU-AAA-2

LCD Module User Manual

Prepared by:	Checked by:	Approved by:
Yu		
Date: 20190819	Date:	Date:

Rev.	Descriptions	Release Date
0.1	Preliminary release	2014-06-24
0.2	Typing correction	2016-04-05
0.3	Update 6. AC Characteristics	2017-07-25
0.4	Update section 3	2019-08-19

Table of Content

1. General Specification 3

2. Block Diagram 3

3. Terminal Function 4

3.1 LVDS Terminal (K2) 4

3.2 Backlight Input Terminal (K3) 4

3.3 Touch Panel Terminal 4

4. Absolute Maximum Ratings 5

5. Electrical Characteristics 5

5.1 Driving TFT LCD Panel 5

5.2 LED Backlight Circuit Characteristics 5

5.3 Touch panel Characteristics 6

6. AC Characteristics 7

6.1 AC Characteristics（LVDS） 7

6.2 AC Characteristics（TFT） 8

7. Optical Characteristics 9

8. Precautions of using LCD Modules 11

1. General Specification

Signal Interface :	LVDS(VESA 24 bit)
Display Technology :	a-Si TFT active matrix
Display Mode :	Transmissive / Normal White
Screen Size(Diagonal) :	8.0”
Outline Dimension :	196.0 x 143.9 x12.2 (mm) (see attached drawing for details)
Active Area :	162.0 x 121.5 (mm)
Number of dots :	800 x 600
Pixel Pitch :	0.2025 x 0.2025 (mm)
Pixel Configuration :	RGB Stripe
Backlight :	LEDs
Viewing Direction :	6 o’clock (Gray scale Inversion) (*1) 12 o’clock (*2)
Touch Panel:	4-wire resistive
Operating Temperature :	-20 ~ +70°C
Storage Temperature :	-30 ~ +80°C
Surface Treatment :	Anti-Glare Surface

Note:
*1. For saturated color display content (eg. pure-red, pure-green, pure-blue or pure-colors -combinations).
*2. For “color scales” display content.
*3. Color tone may slightly change by temperature and driving condition.

2. Block Diagram

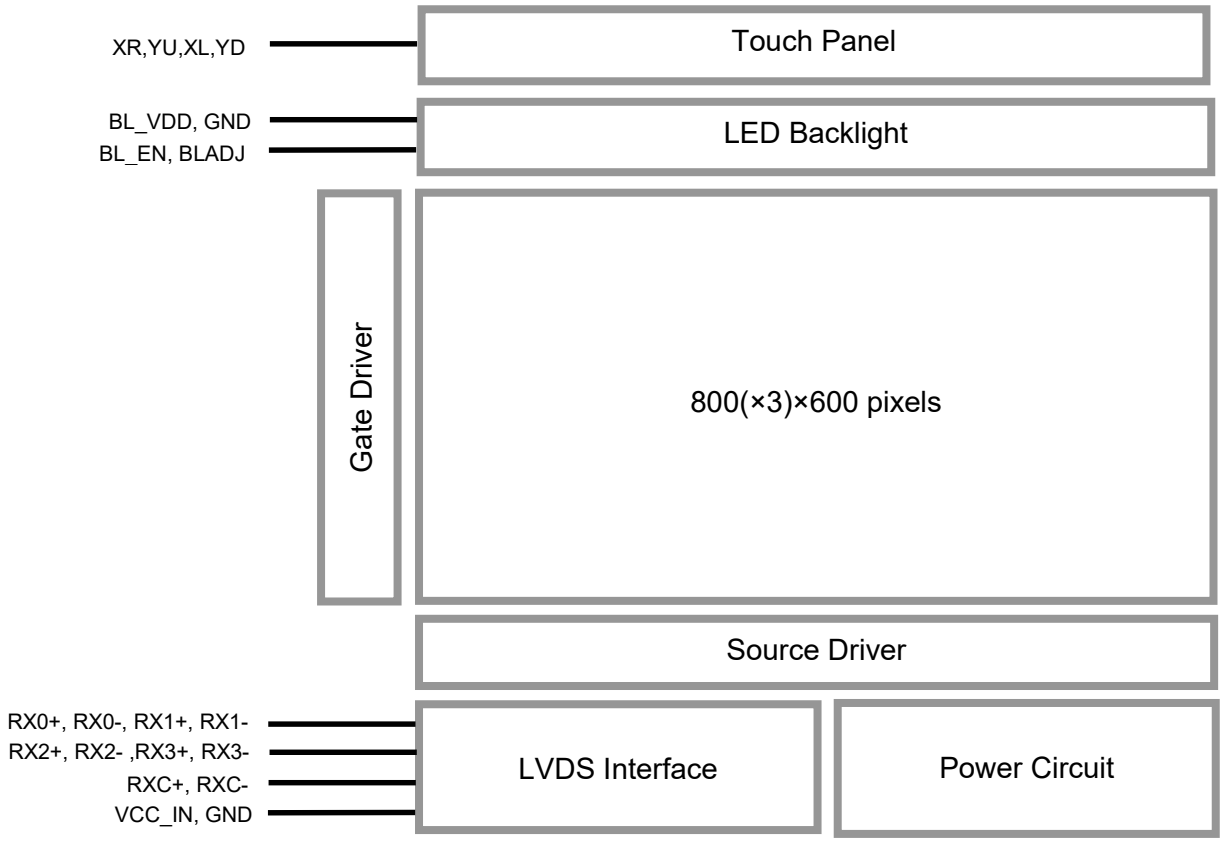

3. Terminal Function

3.1 LVDS Terminal (K1)

Pin No.	Pin Name	I/O	Descriptions
1	VCC_IN	Power	Positive Power Supply (3.3V)
2	VCC_IN	Power	Positive Power Supply (3.3V)
3	NC	-	NO connection
4	NC	-	NO connection
5	RX0-	Input	LVDS receiver negative signal channel 0
6	RX0+	Input	LVDS receiver positive signal channel 0
7	GND	Power	Power Supply GND (0V)
8	RX1-	Input	LVDS receiver negative signal channel 1
9	RX1+	Input	LVDS receiver positive signal channel 1
10	GND	Power	Power Supply GND (0V)
11	RX2-	Input	LVDS receiver negative signal channel 2
12	RX2+	Input	LVDS receiver positive signal channel 2
13	GND	Power	Power Supply GND (0V)
14	RXC-	Input	LVDS receiver negative signal clock
15	RXC+	Input	LVDS receiver positive signal clock
16	GND	Power	Power Supply GND (0V)
17	RX3-	Input	LVDS receiver negative signal channel 3
18	RX3+	Input	LVDS receiver positive signal channel 3
19	NC	-	NO connection
20	NC	-	NO connection

3.2 Backlight Input Terminal (K2)

Pin No.	Pin Name	I/O	Descriptions
1	GND	Power	Power Supply GND (0V)
2	GND		
3	BL_ADJ	Input	Backlight dimming control (*1, *2) PWM may be used to adjust the output brightness
4	BL_VDD	Power	Positive Power Supply(5V)
5	BL_VDD		
6	BL_EN	Input	Backlight driver enable (*1) BLON=Hi, Backlight Driving Booster enable BLON=Lo, Backlight Driving Booster disable

Note:
*1. With built in pull up resistor, it could leave open
*2. Recommended PWM Freq. = 3kHz (active high)

3.3 Touch Panel Terminal

Pin No.	Pin Name	I/O	Descriptions
1	XR	Passive	Right Side sense Terminal
2	YU	Passive	Up Side sense Terminal
3	XL	Passive	Left Side sense Terminal
4	YD	Passive	Down Side sense Terminal

4. Absolute Maximum Ratings

Items	Symbol	Min.	TYP.	Max.	Unit	Condition
Power Supply Voltage	VCC_IN	-0.3	3.3	3.6	V	GND = 0V
Backlight Supply Voltage	BL_VD	-0.3	5.0	6.0	V	GND = 0V
Operating Temperature	T_{OP}	-20	-	70	°C	No Condensation
Storage Temperature	T_{ST}	-30	-	80	°C	No Condensation

Cautions:
Any Stresses exceeding the Absolute Maximum Ratings may cause substantial damage to the device. Functional operation of this device at other conditions beyond those listed in the specification is not implied and prolonged exposure to extreme conditions may affect device reliability.

5. Electrical Characteristics

5.1 Driving TFT LCD Panel

VCC_IN=3.3V ,GND=0V,T_{OP} =25°C

Items	Symbol	MIN.	TYP.	MAX.	Unit	Note
Supply Voltage	VCC_IN	3.0	3.3	3.5	V	
Common Electrode Driving Signal	V_{CMLVDS}	-	1.2	-	V	Note1
Differential Input High Threshold	V_{TH}	-	-	100	mV	
Differential Input Low Threshold	V_{TL}	-100	-	-	mV	
Sync Frequency	FVD	-	60	70	Hz	
VCC Power Consumption	I_{VCC_IN}	-	150	-	mA	

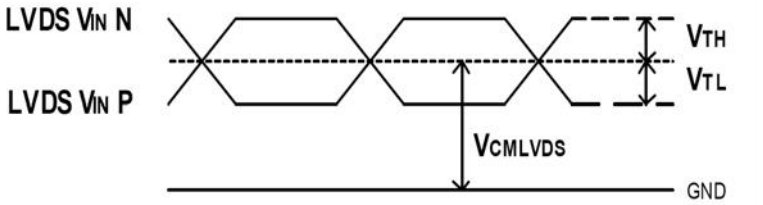

LVDS DC timing diagram

Note1: The value may be different for different LCM.

5.2 LED Backlight Circuit Characteristics

GND=0V, T_{OP}=25°C

Parameter	Symbol	MIN.	TYP.	MAX.	Unit	Note
Operating Voltage	BL_VDD	4.5	5.0	5.5	V	
Input High Voltage	V_{IH}	3.0	-	BL_VDD	V	BL_ADJ,BL_EN
Input Low Voltage	V_{IL}	GND	-	0.3	V	BL_ADJ,BL_EN
Operating Current(*1)	I_{BL_VDD}	-	412	-	mA	BL_VDD

Cautions:
Exceeding the recommended driving current could cause substantial damage to the backlight and shorten its lifetime.

Note:

*1: BL_ADJ=Hi, BL_EN =Hi.

*2. Recommended BL_ADJ PWM Freq. is 3kHz .

5.3 Touch panel Characteristics

Items	MIN.	TYP.	MAX.	Unit	Note
Operating Voltage	-	5.0	-	V	-
Operating Force	60	-	100	g	-
Life Time	-	1,000,000	-	times	-
X Resistance	100	-	840	Ω	-
Y Resistance	260	-	1240	Ω	

Cautions:
Exceeding the recommended Condition could cause substantial damage to the touch panel and shorten its lifetime.

Touch Panel Logic Details

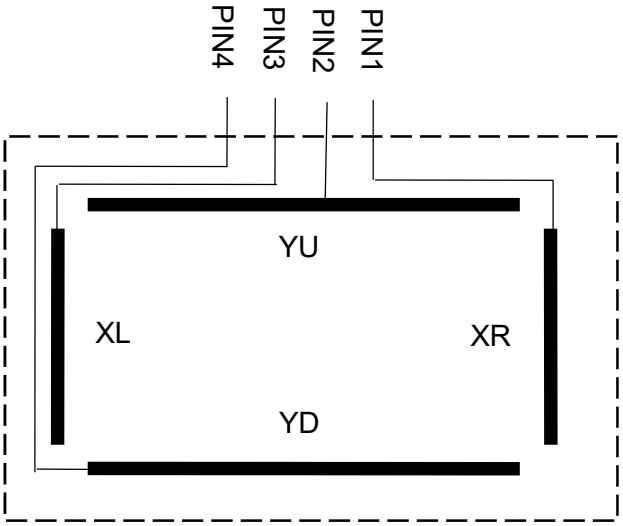

6. AC Characteristics

6.1 AC Characteristics（LVDS）

VCC_IN =3.3V,GND=0V,Ta=25℃

Item	Symbol	MIN.	TYP.	MAX.	Unit	Condition
Input CLK period	t_{RICLK}	8.9	-	50	ns	
Input Data Position 0 (tRICLK = 8.9ns)	t_{RI0}	-0.3	-	+0.3	ns	
Input Data Position 1 (tRICLK = 8.9ns)	t_{RI1}	t_{RI}CLK/7-0.3	t_{RI}CLK/7	t_{RI}CLK/7+0.3	ns	
Input Data Position 2 (tRICLK = 8.9ns)	t_{RI2}	2t_{RI}CLK/7-0.3	2t_{RI}CLK/7	2t_{RI}CLK/7+0.3	ns	
Input Data Position 3 (tRICLK = 8.9ns)	t_{RI3}	3t_{RI}CLK/7-0.3	3t_{RI}CLK/7	3t_{RI}CLK/7+0.3	ns	
Input Data Position 4 (tRICLK = 8.9ns)	t_{RI4}	4t_{RI}CLK/7-0.3	4t_{RI}CLK/7	4t_{RI}CLK/7+0.3	ns	
Input Data Position 5 (tRICLK = 8.9ns)	t_{RI5}	5t_{RI}CLK/7-0.3	5t_{RI}CLK/7	5t_{RI}CLK/7+0.3	ns	
Input Data Position 6 (tRICLK = 8.9ns)	t_{RI6}	6t_{RI}CLK/7-0.3	6t_{RI}CLK/7	6t_{RI}CLK/7+0.3	ns	

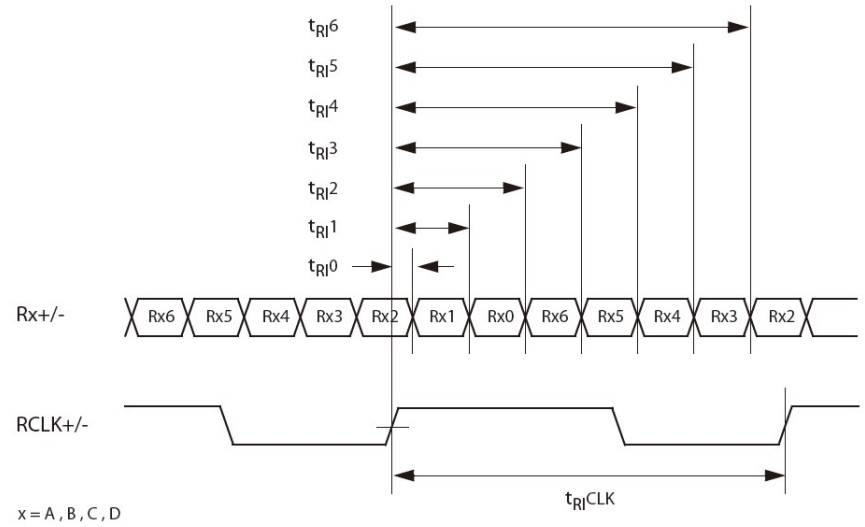

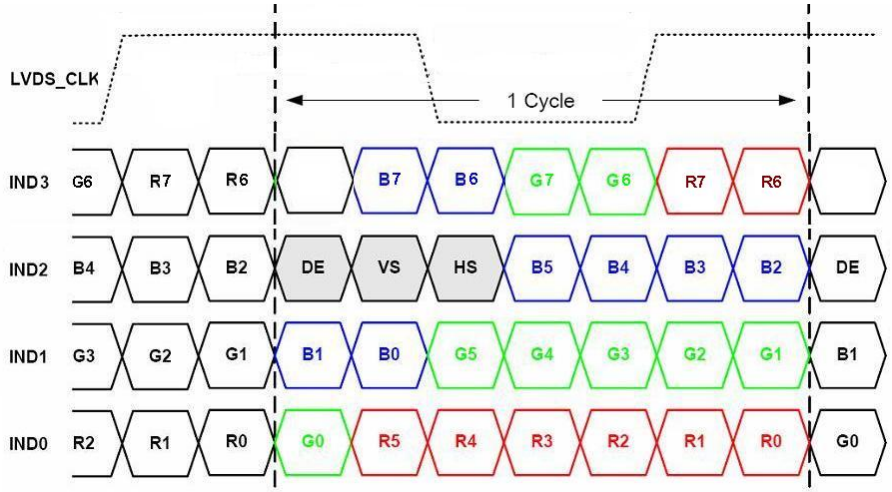

6.2 AC Characteristics（TFT）

Parameter	Symbol	Min	Typ	Max	Unit	Remark
DCLK	F_{clk}	34.5	39.6	50.4	MHz	
	t_{clk}	-	25.3	-	ns	
HSD	t_h	900	1000	1200	DCLK	
	t_{hd}	-	800	-	DCLK	
	t_{hpw}	1	-	40	DCLK	
	t_{hb}	-	88	-	DCLK	
	t_{hfp}	12	112	312	DCLK	
VSD	t_v	640	660	700	th	
	t_{vd}	-	600	-	th	
	t_{vpw}	1	-	20	th	
	t_{vb}	-	39	-	th	
	t_{vfp}	1	21	61	th	

Note: DE timing refer to HSD, VSD input timing.

Vertical input timing Diagram

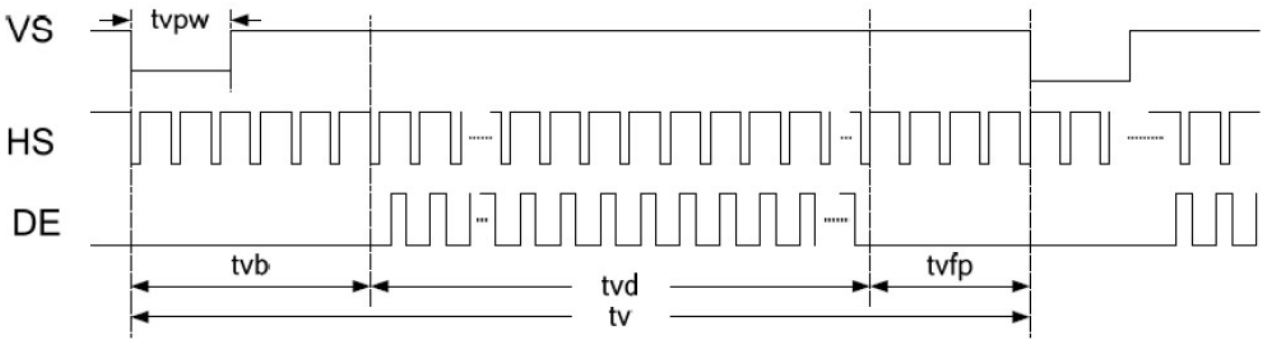

Horizontal input timing Diagram

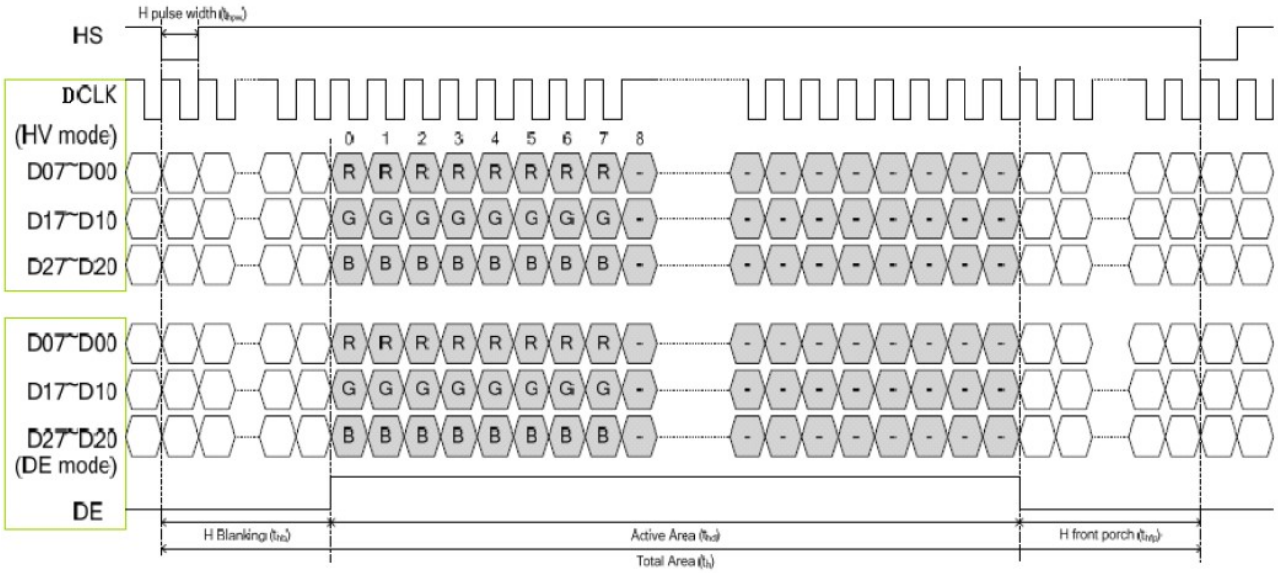

7. Optical Characteristics

Test Conditions:

1. I_F= 180mA, V_F=9.6V, and the ambient temperature is 25℃.
2. The test systems refer to Note 1 and Note 2.

Item		Symbol	Condition	MIN.	TYP.	MAX.	UNIT	Note.
Viewing angle (CR≥10)		θ_L	9 o'clock	60	70	-	degree	Note 2
		θ_R	3 o'clock	60	70	-		
		θ_T	12 o'clock	50	60	-		
		θ_B	6 o'clock	60	70	-		
Response Time		T_f	25℃	-	25	30	ms	Note 1 Note 4
		T_r					ms	
Contrast ratio		CR	θ=0°	600	800	-	-	Note 1,3
Color chromaticlty	White	X	Backlight is on	0.253	0.303	0.353		Note 1 Note 5
		Y		0.257	0.307	0.357		
	Red	X		0.525	0.575	0.625		
		Y		0.296	0.346	0.396		
	Green	X		0.298	0.348	0.398		
		Y		0.527	0.577	0.627		
	Blue	X		0.101	0.151	0.201		
		Y		0.031	0.081	0.131		
Luminance		L		-	200	-	cd/m²	Note 1,6
Luminance uniformity		Y_U		70	75	-	%	Note 1,7

Note 1: Definition of optical measurement system.
The optical characteristics should be measured in dark room. After 5 Minutes operation, the optical properties are measured at the center point of the LCD screen. All input terminals LCD panel must be ground when measuring the center area of the panel.

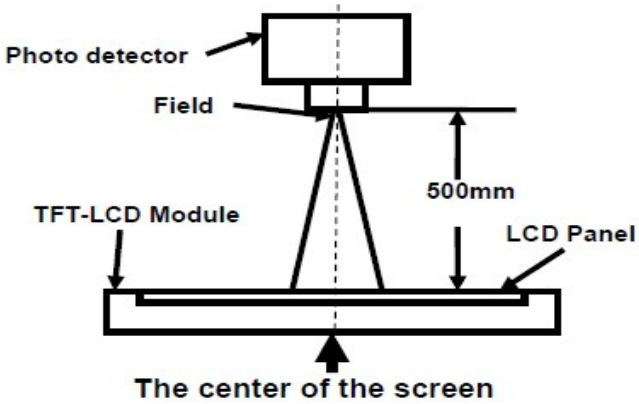

Item	Photo detector	Field
Contrast Ratio	BM-5A	1°
Luminance		
Lum Uniformity		
Chromaticity	SR-3A	
Response Time	TRD100	-

Note 2: Definition of viewing angle range

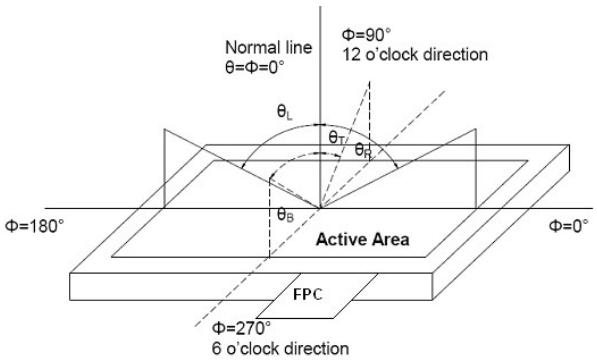

Note 3: Definition of contrast ratio

$$\text{Contrast ratio (CR)} = \frac{\text{Luminance measured when LCD is on the "White" state}}{\text{Luminance measured when LCD is on the "Black" state}}$$

Note 4: Definition of Response time

The response time is defined as the LCD optical switching time interval between "White" state and "Black" state. Rise time (T_{ON}) is the time between photo detector output intensity changed from 90% to 10%. And fall time (T_{OFF}) is the time between photo detector output intensity changed from 10% to 90%.

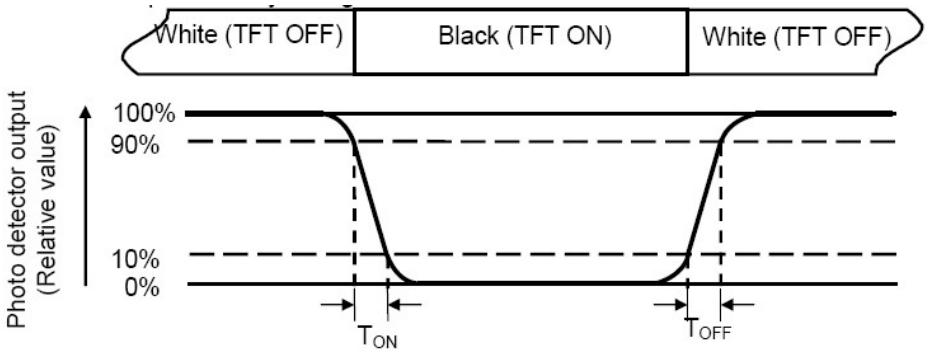

Note 5: Definition of color chromaticity (CIE1931)

Color coordinates measured at center point of LCD.

Note 6: Definition of Luminance Uniformity

Active area is divided into 9 measuring areas (Refer Fig. 2). Every measuring point is placed at the center of each measuring area.

Luminance Uniformity (U) = Lmin/ Lmax

L-------Active area length W----- Active area width

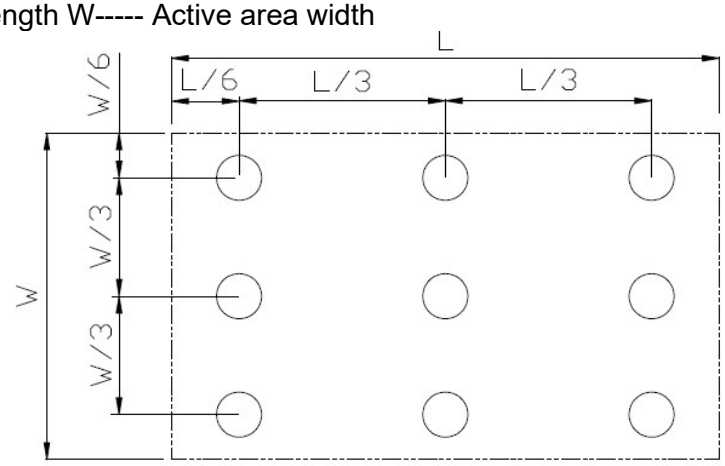

Lmax: The measured Maximum luminance of all measurement position.

Lmin: The measured Minimum luminance of all measurement position.

Note 7: Definition of Luminance:

Measure the luminance of white state at center point.

8. Resistive Touch Panel Design Precautions

1. It should prevent front case touching the touch panel Active Area (A.A.) to prevent abnormal touch.
   It should left gab (e.g. 0.2~0.3mm) in between.

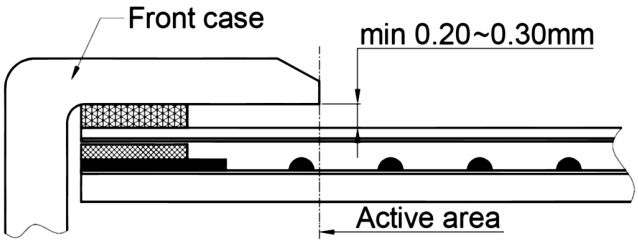

2. Outer case design should take care about the area outside the A.A.
   Those areas contain circuit wires which is having different thickness. Touching those areas could deform the ITO film. As a result case the ITO cold be damaged and shorten its lifetime.
   It is suggested to protect those areas with gasket (between the front case and the touch panel).
   The suggested figures are B≥0.50mm; C≥0.50mm。

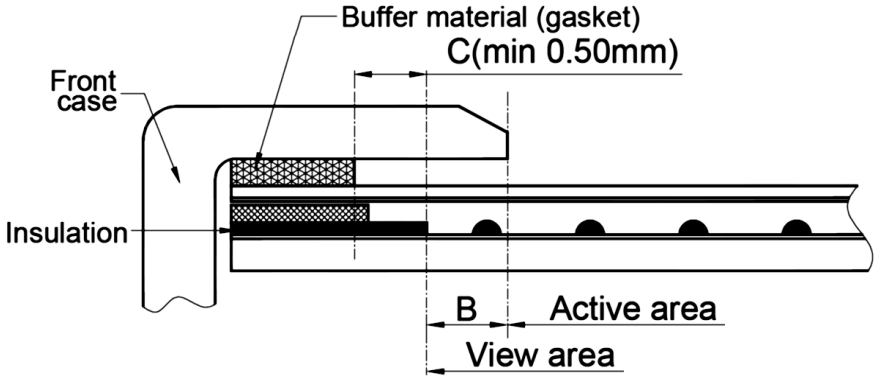

3. The front case side wall should keep space (e.g. 0.2 ~ 0.3mm) from the touch panel.

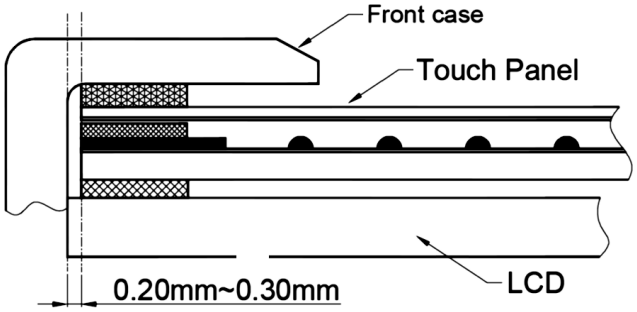

4. In general design,
   touch panel V.A. should be bigger than the LCD V.A.
   and touch panel A.A. should be bigger than the LCD A.A.

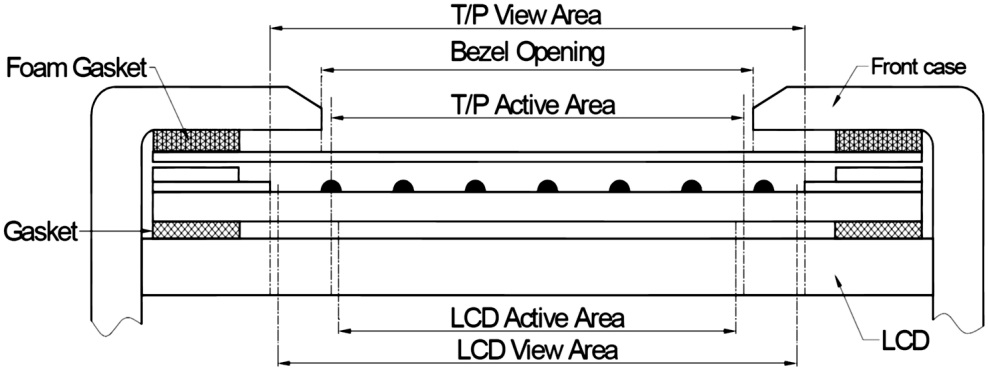

9. Precautions of using LCD Modules

Please refer to "LCD-Module-Design-Handling-Precaution.pdf".