MODEL NO : TM043NDSP01

MODEL VERSION: 00

SPEC VERSION : 1.4

ISSUED DATE: 2019-06-12

■**Preliminary Specification**
□**Final Product Specification**

Customer :

Approved by	Notes

TIANMA Confirmed :

Prepared by	Checked by	Approved by
Zhiming Yuan		

TIANMA CONFIDENTIAL

This technical specification is subjected to change without notice

The information contained herein is the exclusive property of TIANMA MICRO-ELECTRONICS Corporation and shall not be distributed, reproduced, or disclosed in whole or in part without prior written permission of TIANMA MICRO-ELECTRONICS Corporation.

Table of Contents

Table of Contents....2
Record of Revision....3
1 General Specifications....4
2 Input/Output Terminals....5
3 Absolute Maximum Ratings....6
4 Electrical Characteristics....7
5 Timing Chart....9
6 Optical Characteristics....14
7 Environmental / Reliability Test....17
8 Mechanical Drawing....18
9 Packing Drawing....19
10 Precautions for Use of LCD Modules....20

TIANMA CONFIDENTIAL

The information contained herein is the exclusive property of TIANMA MICRO-ELECTRONICS Corporation and shall not be distributed, reproduced, or disclosed in whole or in part without prior written permission of TIANMA MICRO-ELECTRONICS Corporation.

Record of Revision

Rev	Issued Date	Description	Editor
1.0	2018-11-28	Preliminary Specification Release	Zhiming yuan
1.1	2019-2-27	Page6： update Input/Output Terminals. Page16：update drawing.	Zhiming Yuan
1.2	2019-03-12	Page16：update drawing. Update Timing Chart. Update Optical Characteristics.	Zhiming Yuan
1.3	2019-05-29	Update Timing Chart, according ILI6485 spec. Page17：Update Mechanical Drawing.	Zhiming Yuan
1.4	2019-06-12	Update and supplement Timing Chart, according ILI6485 spec. Page6: Update Absolute Maximum Ratings ---Input voltage and note1	Zhiming Yuan

TIANMA CONFIDENTIAL

The information contained herein is the exclusive property of TIANMA MICRO-ELECTRONICS Corporation and shall not be distributed, reproduced, or disclosed in whole or in part without prior written permission of TIANMA MICRO-ELECTRONICS Corporation.

1 General Specifications

Feature		Spec
Display Spec.	Size	4.3 inch
	Resolution	480（RGB）×272
	Technology Type	a-Si SFT
	Pixel Configuration	Vertical Stripe
	Pixel pitch(mm)	0.198×0.198
	Display Mode	SFT
	Surface Treatment	AG
	Viewing Direction	Full view
	Gray Scale Inversion Direction	NA
Mechanical Characteristics	LCM (W x H x D) (mm)	105.50×67.20×2.9
	Active Area(mm)	95.040×53.856
	With /Without TSP	Without TSP
	Matching Connection Type	FH19SC-40S-0.5SH(HIROS)
	LED Numbers	10 LEDS
	Weight (g)	44.4
Electrical Characteristics	Interface	RGB 24bits
	Color Depth	16.7M
	Driver IC	ILI6485

Note 1: Viewing direction for best image quality is different from TFT definition. There is a 180 degree shift.

Note 2: Requirements on Environmental Protection: Q/S0002

Note 3: LCM weight tolerance: ± 5%

TIANMA CONFIDENTIAL

The information contained herein is the exclusive property of TIANMA MICRO-ELECTRONICS Corporation and shall not be distributed, reproduced, or disclosed in whole or in part without prior written permission of TIANMA MICRO-ELECTRONICS Corporation.

2 Input/Output Terminals

Matched connector:FH19SC-40S-0.5SH(HIROS)

Pin No.	Symbol	I/O	Function	Remark
1	VLED-	P	Back light cathode	
2	VLED+	P	Back light anode	
3	GND	P	Ground	
4	VDD	P	Power supply	
5	R0	I	Red Data input	
6	R1	I	Red Data input	
7	R2	I	Red Data input	
8	R3	I	Red Data input	
9	R4	I	Red Data input	
10	R5	I	Red Data input	
11	R6	I	Red Data input	
12	R7	I	Red Data input	
13	G0	I	Green Data input	
14	G1	I	Green Data input	
15	G2	I	Green Data input	
16	G3	I	Green Data input	
17	G4	I	Green Data input	
18	G5	I	Green Data input	
19	G6	I	Green Data input	
20	G7	I	Green Data input	
21	B0	I	Blue Data input	
22	B1	I	Blue Data input	
23	B2	I	Blue Data input	
24	B3	I	Blue Data input	
25	B4	I	Blue Data input	
26	B5	I	Blue Data input	
27	B6	I	Blue Data input	
28	B7	I	Blue Data input	
29	GND	P	Ground	

TIANMA CONFIDENTIAL

The information contained herein is the exclusive property of TIANMA MICRO-ELECTRONICS Corporation and shall not be distributed, reproduced, or disclosed in whole or in part without prior written permission of TIANMA MICRO-ELECTRONICS Corporation.

30	DCLK	I	Clock signal; latching data at the rising edge	
31	DISP	I	Display control/standby mode selection, Internal pull low DISP=”Low”: Standby; DISP=”High”: Normal display	
32	HSYNC	I	Horizontal sync signal; negative polarity(HDPOL=1)	
33	VSYNC	I	Vertical sync signal; negative polarity(HDPOL=1)	
34	DE	I	Data input enable. Active High to enable the data input When not used in SYNC mode, user should connect it to “Low”.	
35	NC(EXTC)	_____	No connection. OTP trim function control. Please keep this pin in floating.	
36	GND	P	Ground	
37	NC(CS)	_____	No connection. Serial communication chip select, Please keep this pin in floating.	
38	NC(SCL)	_____	No connection. Serial communication clock input, Please keep this pin in floating.	
39	NC(SDA)	_____	No connection. Serial communication data input and output, Please keep this pin in floating.	
40	NC(VPP)	_____	No connection. For OTP, Please keep this pin in floating.	

Note1：Please add the FPC connector type and matched one if necessary.
Note2：I——Input, O——Output, P——Power/Ground

3 Absolute Maximum Ratings

GND=0V

Item	Symbol	MIN	MAX	Unit	Remark
Power Voltage	VCC	-0.3	4.0	V	Note1,(Input voltage includes overshoot IO voltage.)
Input voltage	V_{IN}	-0.3	3.6	V	
Operating Temperature	Top	-20	70	℃	
Storage Temperature	Tst	-30	80	℃	
Relative Humidity Note2	RH	--	≤95	%	Ta≤40℃
		--	≤85	%	40℃ <Ta≤50℃
		--	≤55	%	50℃ <Ta≤60℃
		--	≤36	%	60℃ <Ta≤70℃
		--	≤24	%	70℃ <Ta≤80℃
Absolute Humidity	AH	--	≤70	g/m^3	Ta>70℃

Table 3 Absolute Maximum Ratings

Note1: Input voltage include R0~R7, G0~G7, B0~B7, DCLK, HSYNC, VSYNC,DISP, DE.

The information contained herein is the exclusive property of TIANMA MICRO-ELECTRONICS Corporation and shall not be distributed, reproduced, or disclosed in whole or in part without prior written permission of TIANMA MICRO-ELECTRONICS Corporation.

Note2: Ta means the ambient temperature.
It is necessary to limit the relative humidity to the specified temperature range.
Condensation on the module is not allowed.

4 Electrical Characteristics

4.1 Driving TFT LCD Panel

Item		Symbol	MIN	TYP	MAX	Unit	Remark
Supply Voltage		VDD	3.0	3.3	3.6	V	Note1
Input Signal Voltage	Low Level	V_{IL}	DGND	—	0.3×VDD	V	
	High Level	V_{IH}	0.7×VDD	—	VDD	V	
Output Signal Voltage	Low Level	V_{OL}	DGND	—	DGND+0.4	V	
	High Level	V_{OH}	VDD-0.4	—	VDD	V	

Note1: The proposed supply voltage is 3.3±0.1V, the typical voltage 3.3V is applied in the test in Chapter 6 and Chapter 7.

4.2 Backlight Unit

Item	Symbol	MIN	TYP	MAX	Unit	Remark
Forward Current	I_F	--	40	50	mA	10 LEDs (2 LED Serial,5 LED Parallel)
Forward Current Voltage	V_F	-15	16	18	V	
Backlight Power Consumption	W_{BL}	--	640	—	mW	
LED life time	--		30000	-	Hrs	

Note1: The LED driving condition is defied for each LED module (5 LED Serial,2 LED Parallel).
Note2: Under LCM operating, the stable forward current should be inputted. And forward voltage is for reference only.
Note3: I_F is defined for one channel LED. Optical performance should be evaluated at Ta=25℃ only if LED is driven by high current, high ambient temperature & Humidity condition. The life time of LED will be reduced. Operating life means brightness goes down to 50% initial brightness. Typical operating life time is estimated data.
Note4: The LED driving condition is defined for each LED module.

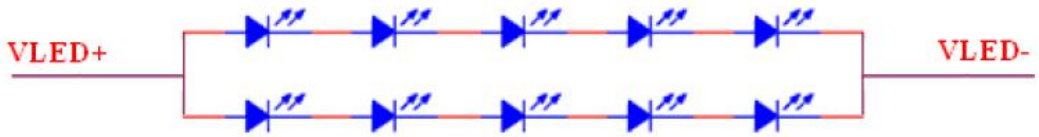

Figure 4.2

TIANMA CONFIDENTIAL

The information contained herein is the exclusive property of TIANMA MICRO-ELECTRONICS Corporation and shall not be distributed, reproduced, or disclosed in whole or in part without prior written permission of TIANMA MICRO-ELECTRONICS Corporation.

www.topwaydisplay.com
深圳市拓普微科技开发有限公司
Shenzhen TOPWAY Technology CO.,Ltd.

4.3 Block Diagram

LCD Module diagram

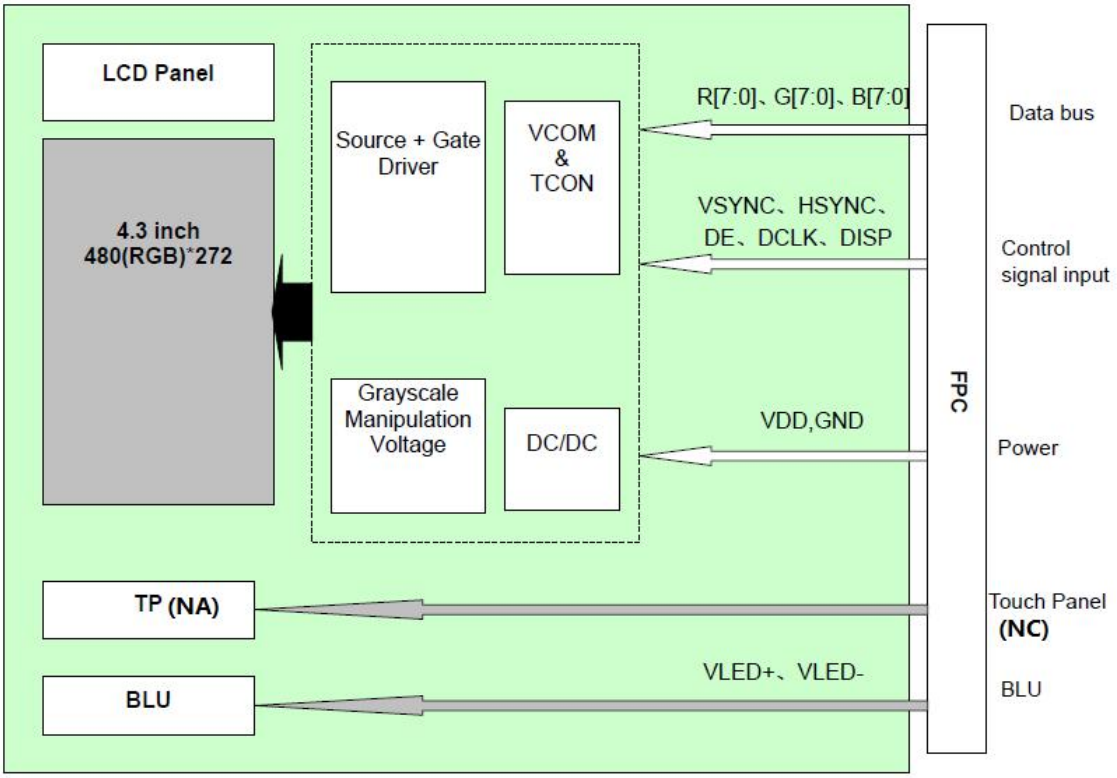

5 Timing Chart

5.1 Clock and Data Input Timing Diagram

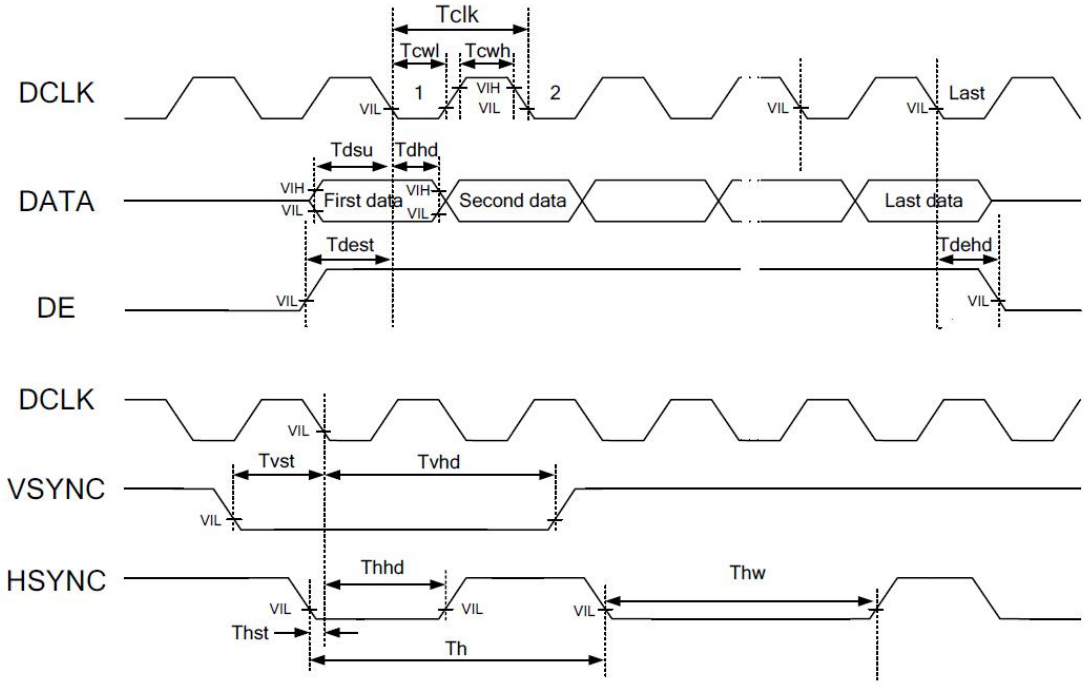

The information contained herein is the exclusive property of TIANMA MICRO-ELECTRONICS Corporation and shall not be distributed, reproduced, or disclosed in whole or in part without prior written permission of TIANMA MICRO-ELECTRONICS Corporation.

5.2 Power ON Sequence

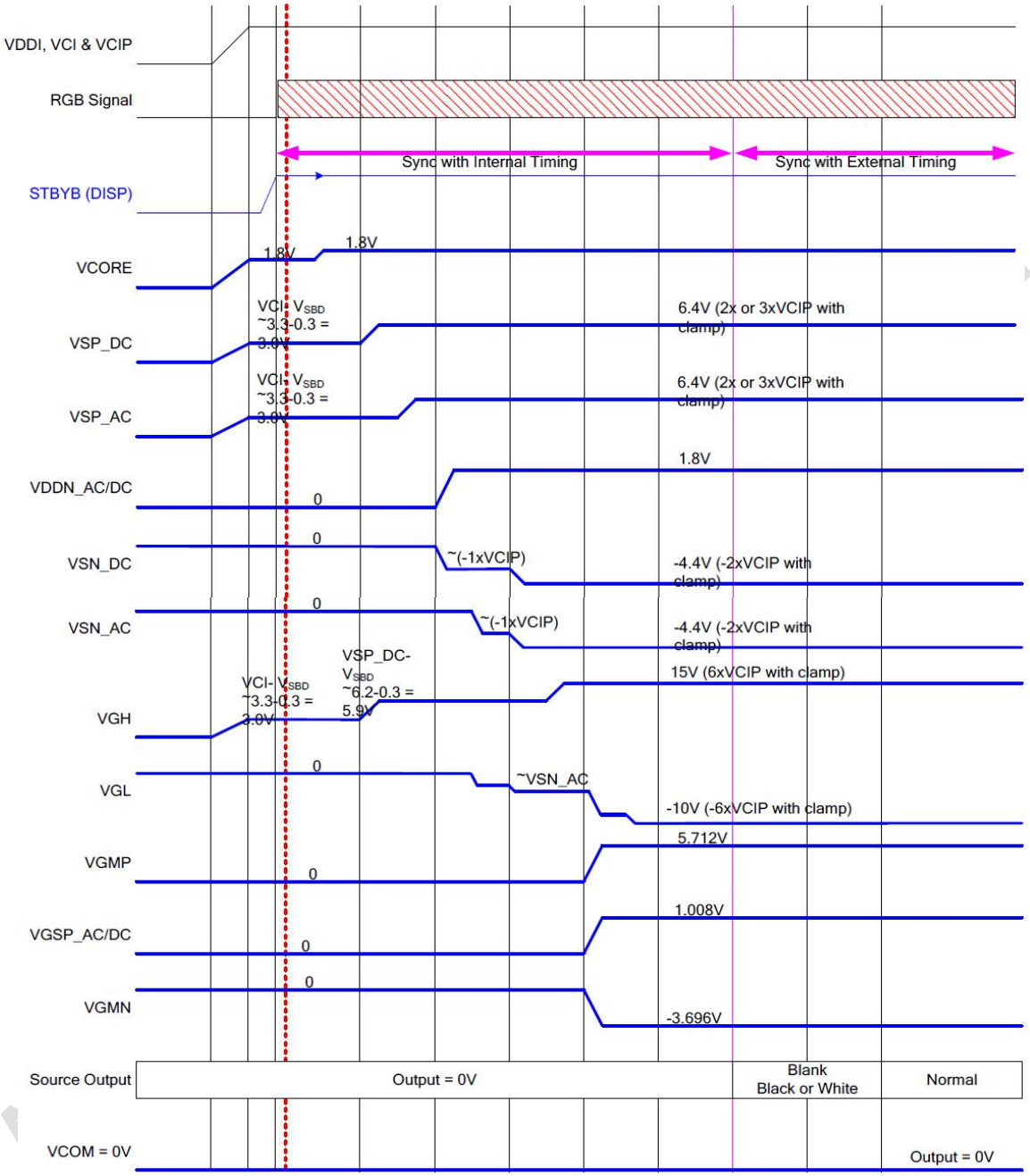

The information contained herein is the exclusive property of TIANMA MICRO-ELECTRONICS Corporation and shall not be distributed, reproduced, or disclosed in whole or in part without prior written permission of TIANMA MICRO-ELECTRONICS Corporation.

5.3 Power Off Sequence

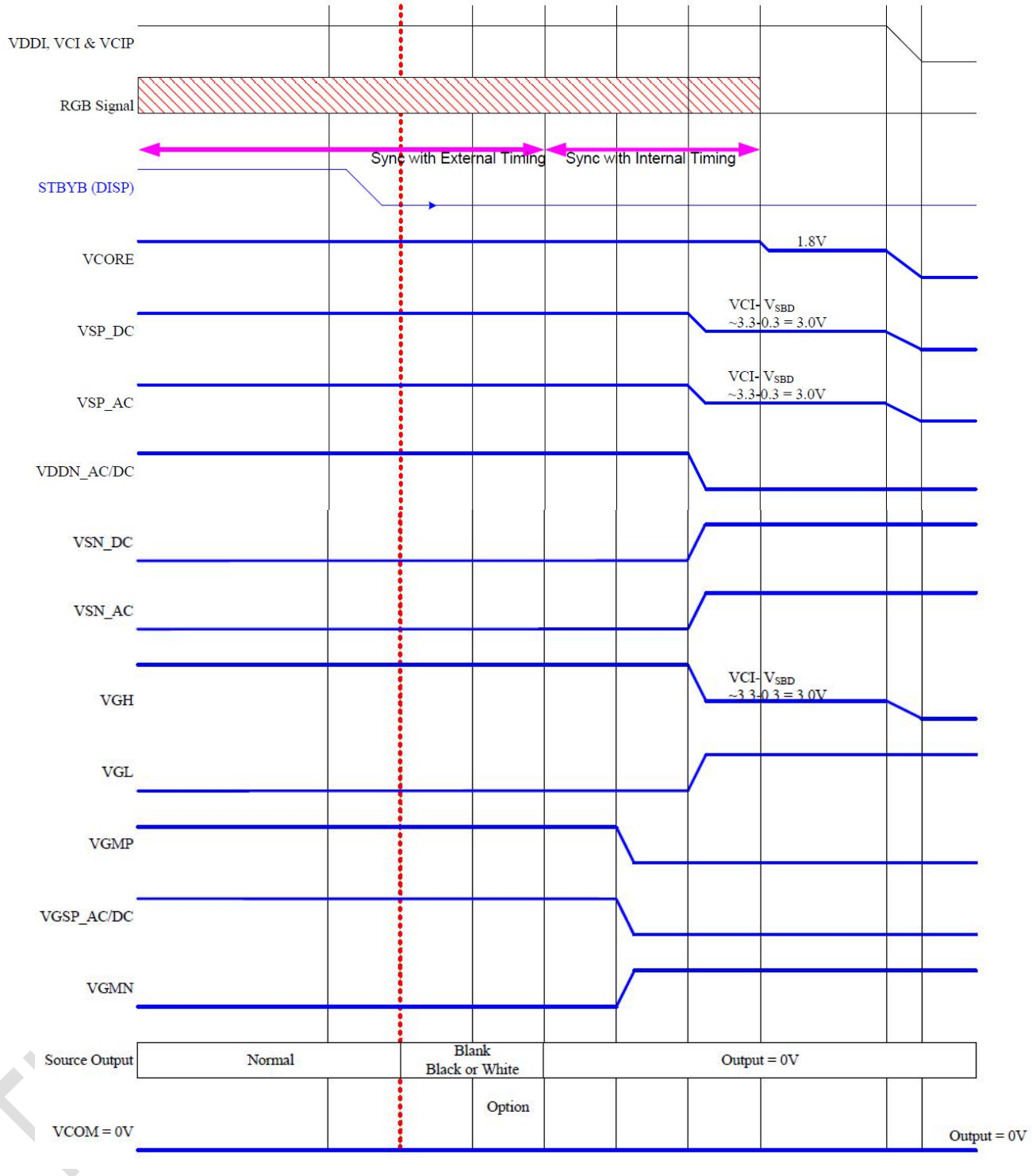

The information contained herein is the exclusive property of TIANMA MICRO-ELECTRONICS Corporation and shall not be distributed, reproduced, or disclosed in whole or in part without prior written permission of TIANMA MICRO-ELECTRONICS Corporation.

5.4 AC Characteristics

AC Electrical Characteristics (VCIP=VCI=VDDI= 3.3V, VSSA= 0V, TA=25°C).

Item	Symbol	Min.	Typ.	Max.	Unit	Conditions
System operation timing						
VCI power source slew time	TPOR	-	-	20	ms	From 0V to 99% VCI
RESX pulse width	tRSTW	10	50	-	us	R=10Kohm, C=1uF
Input/ Output timing						
CLK pulse duty	Tcw	40	50	60	%	
Hsync width	Thw	2	-	-	DCLK	
Hsync period	Th	55	60	65	us	
Vsync setup time	Tvst	12	-	-	ns	
Vsync hold time	Tvhd	12	-	-	ns	
Hsync setup time	Thst	12	-	-	ns	
Hsync hold time	Thhd	12	-	-	ns	
Data setup time	Tdsu	12	-	-	ns	
Data hold time	Tdhd	12	-	-	ns	
DE setup time	Tdest	10	-	-	ns	
DE setup time	Tdehd	10	-	-	ns	
SD output stable time	Tst	-	-	12	us	Output settled within +20mV Loading = 6.8k+28.2pF.
GD output rise and fall time	Tgst	-	-	6	ns	Output settled (5%~95%), Loading = 4.7k+29.8pF

5.5 SYNC Mode Timing Diagram

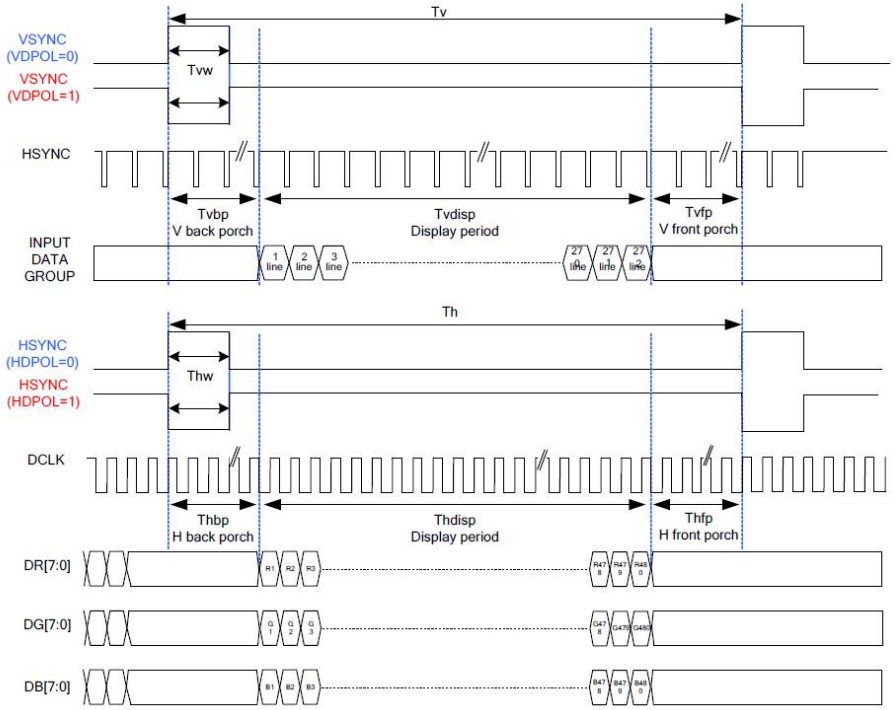

The information contained herein is the exclusive property of TIANMA MICRO-ELECTRONICS Corporation and shall not be distributed, reproduced, or disclosed in whole or in part without prior written permission of TIANMA MICRO-ELECTRONICS Corporation.

5.6 DE Mode Timing Diagram

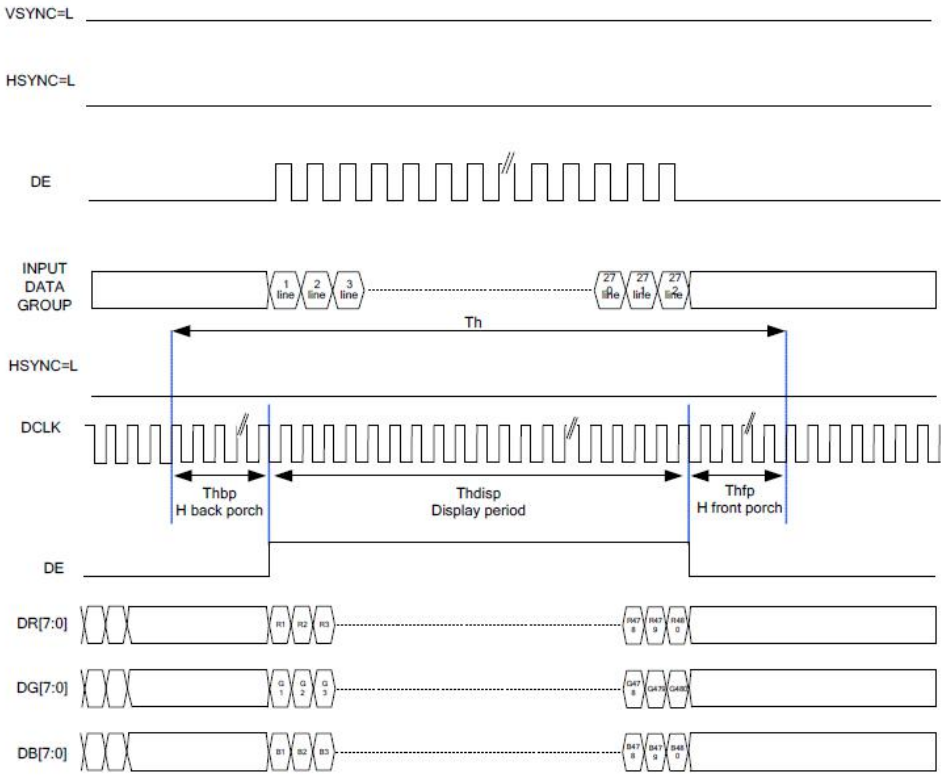

5.7 SYNC-DE Mode Timing Diagram

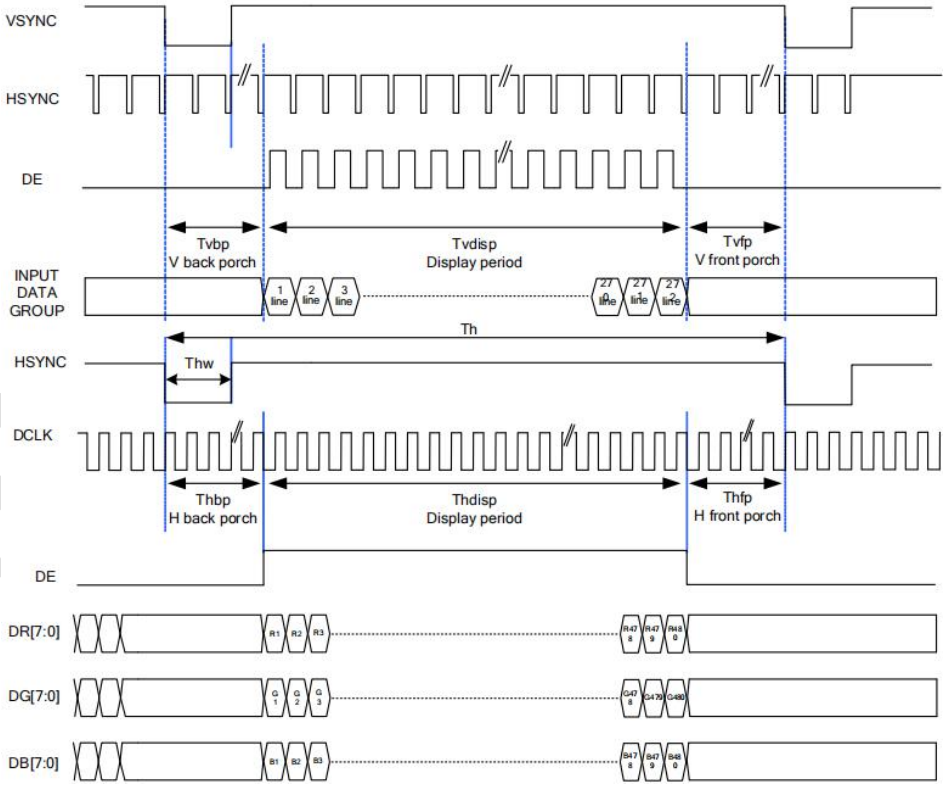

The information contained herein is the exclusive property of TIANMA MICRO-ELECTRONICS Corporation and shall not be distributed, reproduced, or disclosed in whole or in part without prior written permission of TIANMA MICRO-ELECTRONICS Corporation.

5.8 RGB Input Timing Table

480RGB X 272 Resolution Timing Table							
Item		Symbol	Min.	Typ.	Max.	Unit	Remark
DCLK Frequency		Fclk	8	9	12	MHz	
DCLK Period		Tclk	125	111	83	ns	
HSYNC	Period Time	Th	487	531	598	DCLK	
	Display Period	Thdisp	-	480	-	DCLK	
	Back Porch	Thbp	3	43	43	DCLK	By H_Blanking setting
	Front Porch	Thfp	4	8	75	DCLK	
	Pulse Width	Thw	2	4	75	DCLK	
VSYNC	Period Time	Tv	276	292	321	H	
	Display Period	Tvdisp	-	272	-	H	
	Back Porch	Tvbp	2	12	12	H	By V_Blanking setting
	Front Porch	Tvfp	2	8	37	H	
	Pulse Width	Tvw	2	4	37	H	

Note: 1.It is necessary to keep Tvbp =12 and Thbp =43 in sync mode. DE mode is unnecessary to keep it.

2.Thbp+Thfp >=7

TIANMA CONFI

The information contained herein is the exclusive property of TIANMA MICRO-ELECTRONICS Corporation and shall not be distributed, reproduced, or disclosed in whole or in part without prior written permission of TIANMA MICRO-ELECTRONICS Corporation.

6 Optical Characteristics

Item		Symbol	Condition	Min	Typ	Max	Unit	Remark
View Angles		θT	CR≧10	70	80	-	Degree	Note2,3
		θB		70	80	-		
		θL		70	80	-		
		θR		70	80	-		
Contrast Ratio		CR	θ=0°	600	800	-		Note 3
Response Time		T_{ON}	25℃	-	20	30	ms	Note 4
		T_{OFF}						
Chromaticity	White	x	Backlight is on		0.303			Note 1,5
		y			0.320			
	Red	x			0.588			Note 1,5
		y			0.354			
	Green	x			0.338			Note 1,5
		y			0.583			
	Blue	x			0.152			Note 1,5
		y			0.092			
Uniformity		U		75	80	-	%	Note 6
NTSC				45	50	-	%	Note 5
Luminance		L		350	400	-	cd/m^2	Note 7

Test Conditions:

1. I_F= **40** mA, and the ambient temperature is 25℃.
2. The test systems refer to Note 1 and Note 2.

TIANMA CONFIDENTIAL

The information contained herein is the exclusive property of TIANMA MICRO-ELECTRONICS Corporation and shall not be distributed, reproduced, or disclosed in whole or in part without prior written permission of TIANMA MICRO-ELECTRONICS Corporation.

Note 1: Definition of optical measurement system.

The optical characteristics should be measured in dark room. After 5 Minutes operation, the optical properties are measured at the center point of the LCD screen. All input terminals LCD panel must be ground when measuring the center area of the panel.

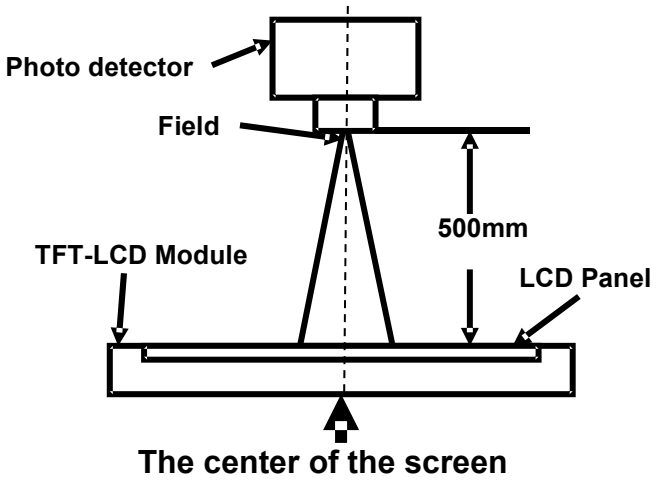

Item	Photo detector	Field
Contrast Ratio	SR-3A	1°
Luminance		
Chromaticity		
Lum Uniformity		
Response Time	BM-7A	2°

Note 2: Definition of viewing angle range and measurement system.

viewing angle is measured at the center point of the LCD by CONOSCOPE(ergo-80)。

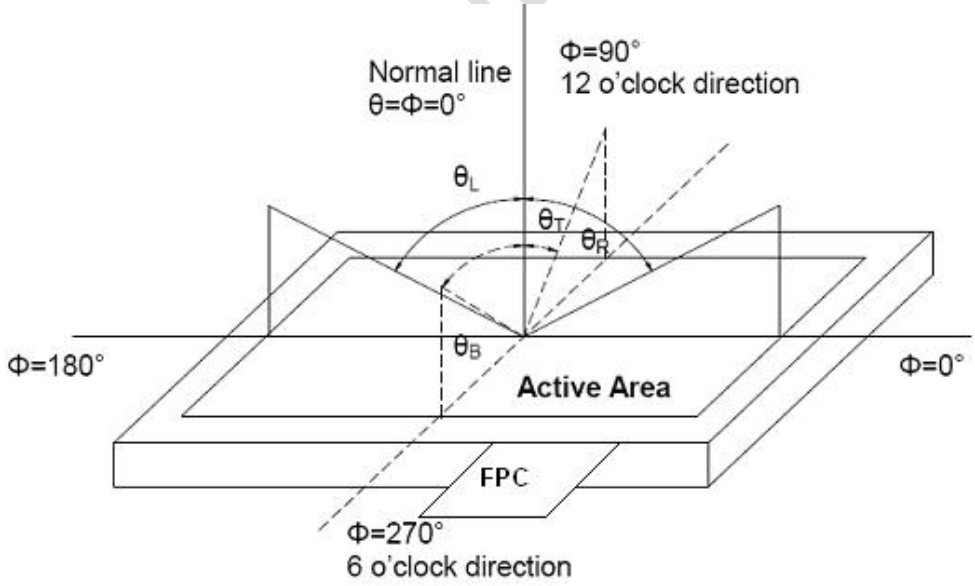

Note 3: Definition of contrast ratio

$$\text{Contrast ratio (CR)} = \frac{\text{Luminance measured when LCD is on the "White" state}}{\text{Luminance measured when LCD is on the "Black" state}}$$

"White state ": The state is that the LCD should drive by Vwhite.

"Black state": The state is that the LCD should drive by Vblack.

The information contained herein is the exclusive property of TIANMA MICRO-ELECTRONICS Corporation and shall not be distributed, reproduced, or disclosed in whole or in part without prior written permission of TIANMA MICRO-ELECTRONICS Corporation.

Vwhite: To be determined Vblack: To be determined.

Note 4: Definition of Response time

The response time is defined as the LCD optical switching time interval between “White” state and “Black” state. Rise time (T_{ON}) is the time between photo detector output intensity changed from 90% to 10%. And fall time (T_{OFF}) is the time between photo detector output intensity changed from 10% to 90%.

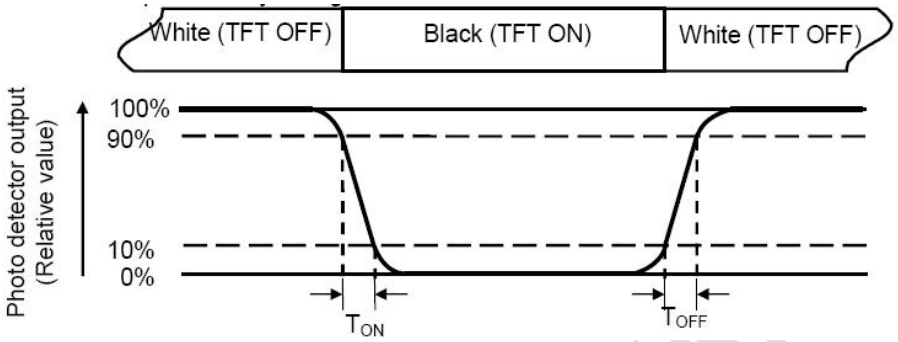

Note 5: Definition of color chromaticity (CIE1931)

Color coordinates measured at center point of LCD.

Note 6: Definition of Luminance Uniformity

Active area is divided into 9 measuring areas (Refer Fig. 2). Every measuring point is placed at the center of each measuring area.

Luminance Uniformity (U) = Lmin/ Lmax

L-------Active area length W----- Active area width

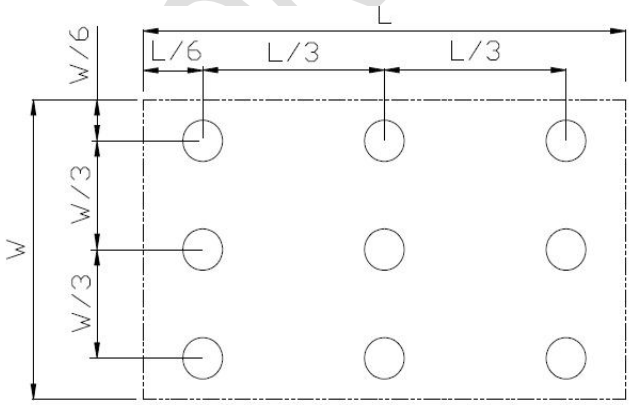

Lmax: The measured Maximum luminance of all measurement position.

Lmin: The measured Minimum luminance of all measurement position.

Note 7: Definition of Luminance:

Measure the luminance of white state at center point.

The information contained herein is the exclusive property of TIANMA MICRO-ELECTRONICS Corporation and shall not be distributed, reproduced, or disclosed in whole or in part without prior written permission of TIANMA MICRO-ELECTRONICS Corporation.

7 Environmental / Reliability Test

No	Test Item	Condition	Remarks
1	High Temperature Operation	Ta=+70℃，240 hours	IEC60068-2-1:2007 GB2423.2-2008
2	Low Temperature Operation	Ta=-20℃，240 hours	IEC60068-2-1:2007 GB2423.1-2008
3	High Temperature Storage	Ta=+80℃，240 hours	IEC60068-2-1:2007 GB2423.2-2008
4	Low Temperature Storage	Ta=-30℃，240 hours	IEC60068-2-1:2007 GB2423.1-2008
5	Storage at High Temperature and Humidity	Ta=+60℃，90% RH 240 hours	IEC60068-2-78 :2001 GB/T2423.3—2006
6	Thermal Shock (non-operation)	-30℃ 30min ~+80℃ 30min， Change time：5min， 20 cycles	Start with cold temperature, End with high temperature, IEC60068-2-14:1984,GB2423.22-2002
7	ESD	C=150pF,R=330Ω, 5 point/panel, Air: ±8KV, 5 times; Contact ±4KV,5times (Environment:15℃ ~35℃,30%~60%,80Kpa~106Kpa)	IEC61000-4-2:2001 GB/T17626.2-2006
8	Package Drop Test	Height：60cm{＞10KG)；80cm(≤10KG)}; 1corner,3edges,6surfaces	IEC60068-2-32:1990 GB/T2423.8—1995
	Package Vibration test	frequency：5-20-200HZ PSD : 0.01-0.01-0.001 Total:0.781g2/HZ,x/y/z direction 30min.	

Note1: Ts is the temperature of panel's surface.

Note2: Ta is the ambient temperature of sample.

Note3: Before cosmetic and function test, the product must have enough recovery time, at least 2 hours at room temperature.

Note 4: In the standard condition, there shall be no practical problem that may affect the display function. After the reliability test, the product only guarantees operation, but don't guarantee all of the cosmetic specification.

TIANMA CONFIDENTIAL

The information contained herein is the exclusive property of TIANMA MICRO-ELECTRONICS Corporation and shall not be distributed, reproduced, or disclosed in whole or in part without prior written permission of TIANMA MICRO-ELECTRONICS Corporation.

8 Mechanical Drawing

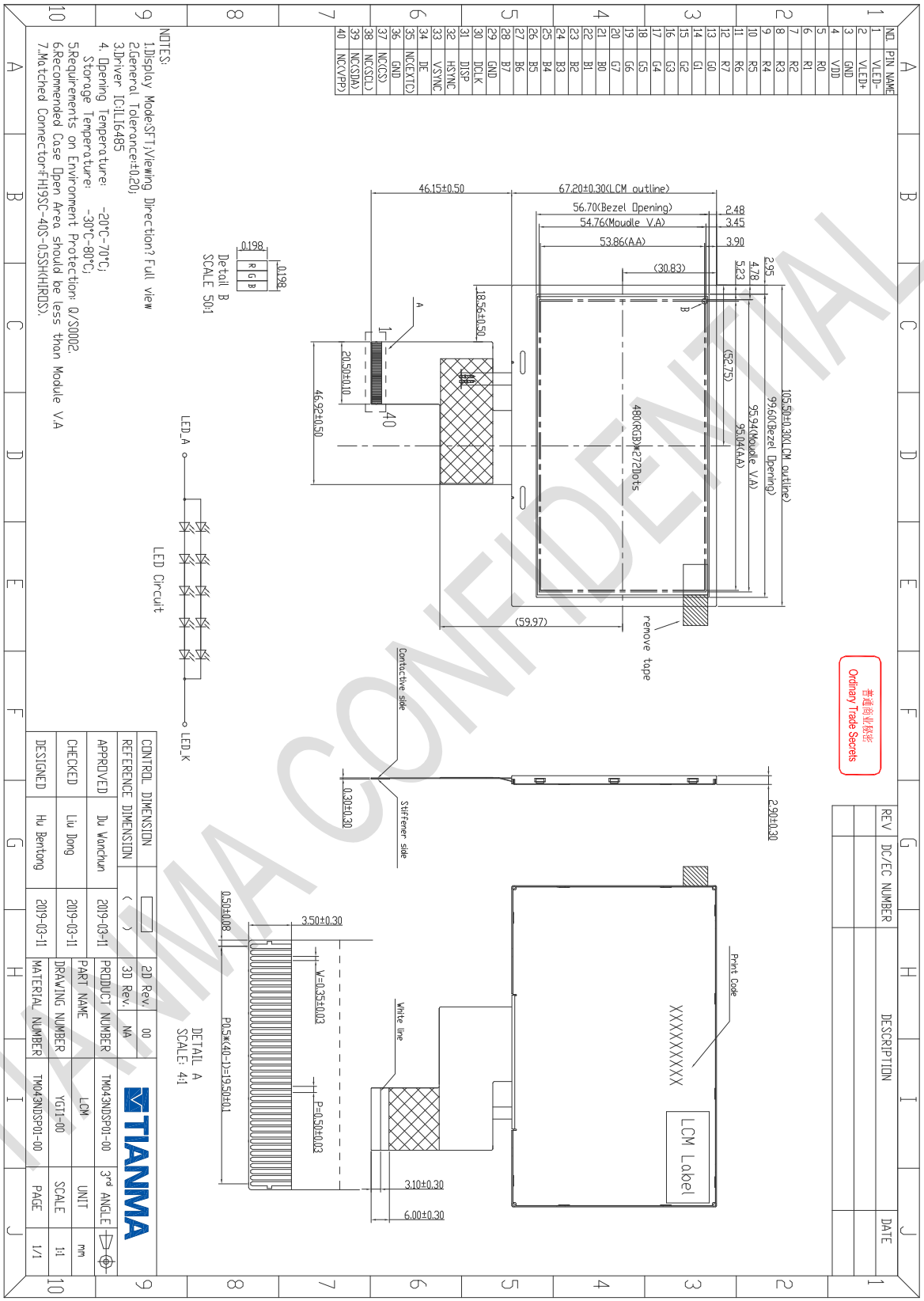

TIANMA CONFIDENTIAL

The information contained herein is the exclusive property of TIANMA MICRO-ELECTRONICS Corporation and shall not be distributed, reproduced, or disclosed in whole or in part without prior written permission of TIANMA MICRO-ELECTRONICS Corporation.

9 Packing Drawing

No	Item	Model (Material)	Dimensions(mm)	Unit Weight(Kg)	Quantity	Remark
1	LCM module	TM043NDSP01	105.5x67.2x2.9	0.044	TBD	
2	Partition_1	Corrugated Paper	513x333x106	0.7	2	
3.	Anti-Static Bag	PE	175.8x125x0.05	0.0007	112	Anti-static
4	Dust-Proof Bag	PE	700x530	0.0600	1	
5	Partition_2	Corrugated Paper	505x332x4.00	0.09	3	
6	Corrugated Bar	Corrugated Paper	513x117x3	0.04	8	
7	Carton	Corrugated Paper	530x350x250	1.1000	1	
8	Total weight					

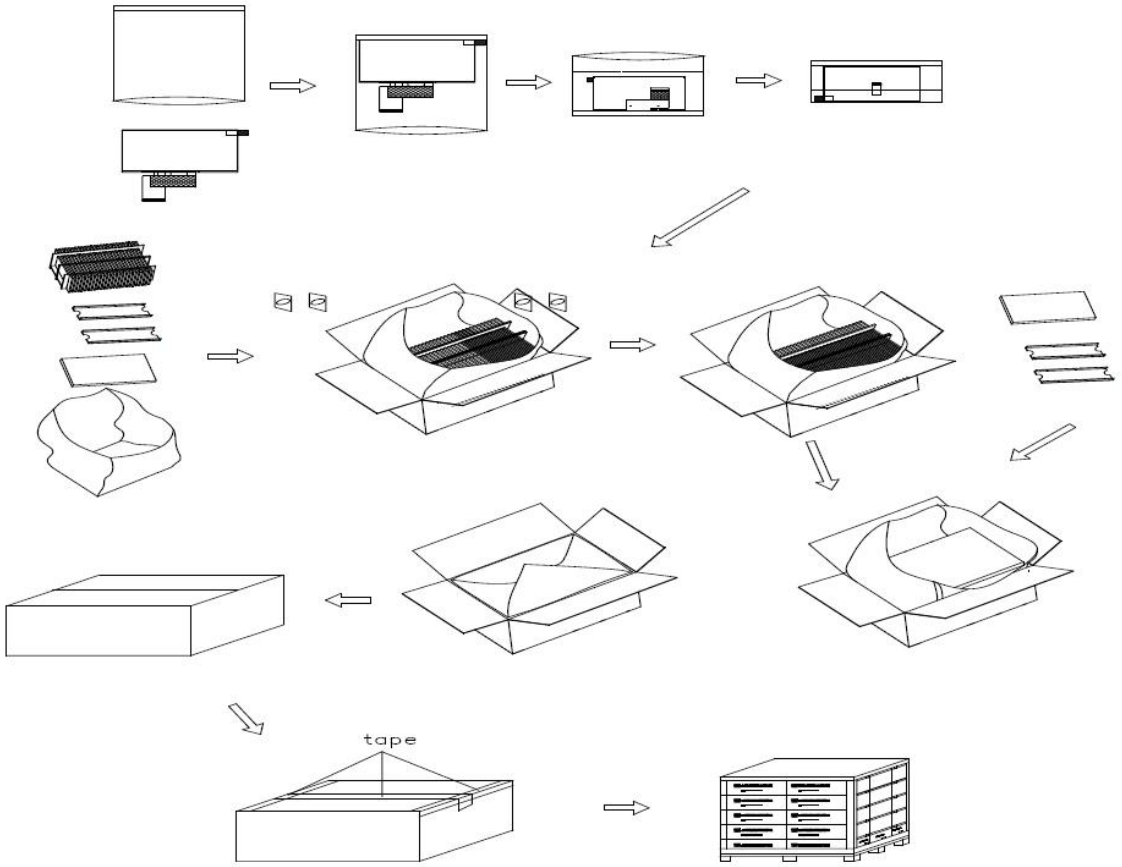

The information contained herein is the exclusive property of TIANMA MICRO-ELECTRONICS Corporation and shall not be distributed, reproduced, or disclosed in whole or in part without prior written permission of TIANMA MICRO-ELECTRONICS Corporation.

10 Precautions for Use of LCD Modules

10.1 Handling Precautions

10.1.1 The display panel is made of glass. Do not subject it to a mechanical shock by dropping it from a high place, etc.

10.1.2 If the display panel is damaged and the liquid crystal substance inside it leaks out, be sure not to get any in your mouth, if the substance comes into contact with your skin or clothes, promptly wash it off using soap and water.

10.1.3 Do not apply excessive force to the display surface or the adjoining areas since this may cause the color tone to vary.

10.1.4 The polarizer covering the display surface of the LCD module is soft and easily scratched. Handle this polarizer carefully.

10.1.5 If the display surface is contaMinated, breathe on the surface and gently wipe it with a soft dry cloth. If still not completely clear, moisten cloth with one of the following solvents:

- Isopropyl alcohol
- Ethyl alcohol

Solvents other than those mentioned above may damage the polarizer. Especially, do not use the following:

- Water
- Ketone
- Aromatic solvents

10.1.6 Do not attempt to disassemble the LCD Module.

10.1.7 If the logic circuit power is off, do not apply the input signals.

10.1.8 To prevent destruction of the elements by static electricity, be careful to maintain an optimum work environment.

10.1.8.1 Be sure to ground the body when handling the LCD Modules. And ensure bezel is connected to ground during using.

10.1.8.2 Tools required for assembly, such as soldering irons, must be properly ground.

10.1.8.3 To reduce the amount of static electricity generated, do not conduct assembly and other work under dry conditions.

10.1.8.4 The LCD Module is coated with a film to protect the display surface. Be care when peeling off this protective film since static electricity may be generated.

10.2 Storage precautions

10.2.1 When storing the LCD modules, avoid exposure to direct sunlight or to the light of fluorescent lamps.

10.2.2 The LCD modules should be stored under the storage temperature range. If the LCD modules will be stored for a long time, the recommend condition is:

Temperature : 0℃ ～ 40℃ Relatively humidity: ≤80%

10.2.3 The LCD modules should be stored in the room without acid, alkali and harmful gas.

10.3 Transportation Precautions

10.3.1 The LCD modules should be no falling and violent shocking during transportation, and also should avoid excessive press, water, damp and sunshine.

TIANMA CONFIDENTIAL

The information contained herein is the exclusive property of TIANMA MICRO-ELECTRONICS Corporation and shall not be distributed, reproduced, or disclosed in whole or in part without prior written permission of TIANMA MICRO-ELECTRONICS Corporation.