深圳市拓普微科技开发有限公司

SHENZHEN TOPWAY TECHNOLOGY CO., LTD.

LMT025ENPFWA-NAN

LCD Module User Manual

Prepared by:	Checked by:	Approved by:
SunQi		DingXin
Date: 2022-06-09	Date:	Date:2022-06-09

Rev.	Descriptions	Release Date
0.1	Preliminary release	2022-05-17
0.2	Minor Updata	2022-06-09

Table of Content

1. Basic Specifications 3

1.1 Block Diagram 3
1.2 Terminal (K3\K5) Functions(Default) 4
1.3 Terminal (K1\K2) Functions 4

2. Absolute Maximum Ratings 4

3. Electrical Characteristics 5

3.1 DC Characteristics 5
3.2 Display Serial Interface Timing Characteristics (4-line SPI system)(Default) 5
3.3 8080 Mode System Bus Timing 6
3.4 Reset Timing 7

4. Display Commands 8

5. Optical Characteristics 13

6. LCD Module Design and Handling Precautions 15

7. Outline Drawing 17

1. Basic Specifications

Screen Size(Diagonal) :	2.5”
Color Depth:	262k color
Number of dots :	320x (RGB) x 160
Active Area :	56.64 x 28.32 mm
Dot Pitch :	0.140 x 0.140 mm
Display Technology :	a-Si TFT active matrix
Display Mode :	SFT
Interface:	SPI/CUP 8bit
Pixel Configuration :	R.G.B. Vertical Stripe
Viewing Direction :	full view angle
Backlight Type:	White LEDs
Outline Dimension :	84.0 x 38.3 x 13.0MAX mm
Operating Temperature :	-20 ~ +70°C (No Condensation)
Storage Temperature :	-30 ~ +80°C (No Condensation)

Note:
1. For saturated color display content (eg. pure-red, pure-green, pure-blue or pure-colors-combinations).
2. For “color scales” display content.
3. Color tone may slightly change by temperature and driving condition.

1.1 Block Diagram

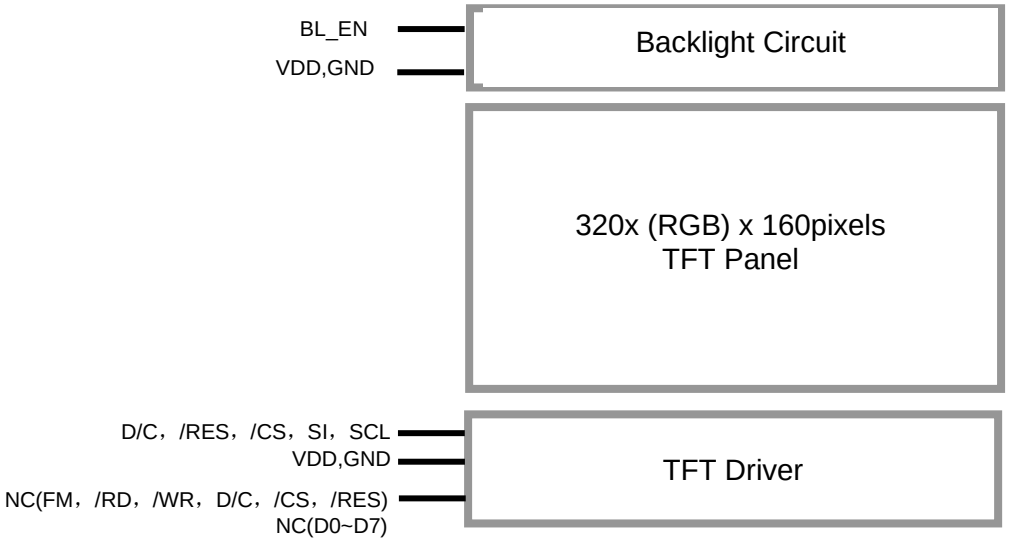

1.2 Terminal (K3\K5) Functions(Default)

Pin No.	PIN Name	I/O	Descriptions
1	GND	Power	Negative power supply ,0V
2	VDD	Power	Positive power supply
3	SI	Input	Serial in/out signal.
4	SCL	Input	Serial Clock
5	D/C	Input	Serves as command or parameter select.
6	/RES	Input	Reset Signal: /RES = L, Initialization is executed /RES = H, Normal running
7	/CS	Input	Chip Select Signal: /CS=L, enable access to the LCD module /CS=H, disable access to the LCD module
8	BLEN	Input	Backlight Driver enable signal, active High, PWM(*1) can be possible

Note:
*1. The PWM frequency is between 200Hz and 500Hz

1.3 Terminal (K1\K2) Functions

Pin No.	PIN Name	I/O	Descriptions
1	NC(GND)	Power	Negative power supply ,0V
2	NC(GND)	Power	
3	NC(BLEN)	Input	Backlight Driver enable signal, active High, PWM can be possible
4	NC(VDD)	Power	Positive power supply
5	NC(VDD)	Power	
6	NC(/RD)	Input	Read enable input, active LOW
7	NC(/WR)	Input	Write enable input, active LOW
8	NC(D/C)	Input	Register Select Signal: D/C = H, Transferring the Display Data D/C = L, Transferring the Control Data
9	NC(/CS)	Input	Chip Select Signal: /CS=L, enable access to the LCD module /CS=H, disable access to the LCD module
10	NC(D0)	I/O	Data Bus
:	:	I/O	
17	NC(D7)	I/O	
18	NC(/RES)	Input	Reset Signal: /RES = L, Initialization is executed /RES = H, Normal running
19	NC(FM)	Output	Displaying timing frame signal
20	NC	-	NC

Note: 4-SPI and parallel port configuration method

Mode	Install	No install
4-SPI (default)	R21(100Ω, 0603*4) R1-R4,R9,R27-R34 (0Ω,0603)	R18-R20 R5-R8,R10,R36
80-8bit	R18-R20(100Ω, 0603*4) R5-R8,R10,R36(0Ω,0603)	R21 R1-R4,R9,R27-R34

2. Absolute Maximum Ratings

Items	Symbol	Min.	Max.	Unit	Condition
Supply Voltage	VDD	-0.3	+5.3	V	GND = 0V
Operating Temperature	T_{OP}	-20	+70	°C	-
Storage Temperature	T_{ST}	-30	+80	°C	-

Cautions:
Any Stresses exceeding the Absolute Maximum Ratings may cause substantial damage to the device. Functional operation of this device at other conditions beyond those listed in the specification is not implied and prolonged exposure to extreme conditions may affect device reliability.

3. Electrical Characteristics

3.1 DC Characteristics

VDD=5.0V ,GND=0V, T_{OP}=25°C

Items	Symbol	MIN.	TYP.	MAX.	Unit	Application Pin
Supply Voltage	VDD	4.7	5.0	5.3	V	VDD
Input High Voltage	V_{IH}	2.4	-	3.4	V	/RES, /CS, D/C, D0~D7,/WR,/RD, SCL,SI
Input Low Voltage	V_{IL}	-	-	1.0	V	
Output High Voltage	V_{OH}	2.7	-	3.4	V	D0~D7,FM
Output Low Voltage	V_{OL}	GND	-	0.7	V	
Operating Current	I_{DD}	-	83.9	-	mA	Backlight are ON
	I_{DD}	-	2.86	-	mA	Backlight are OFF

3.2 Display Serial Interface Timing Characteristics (4-line SPI system)(Default)

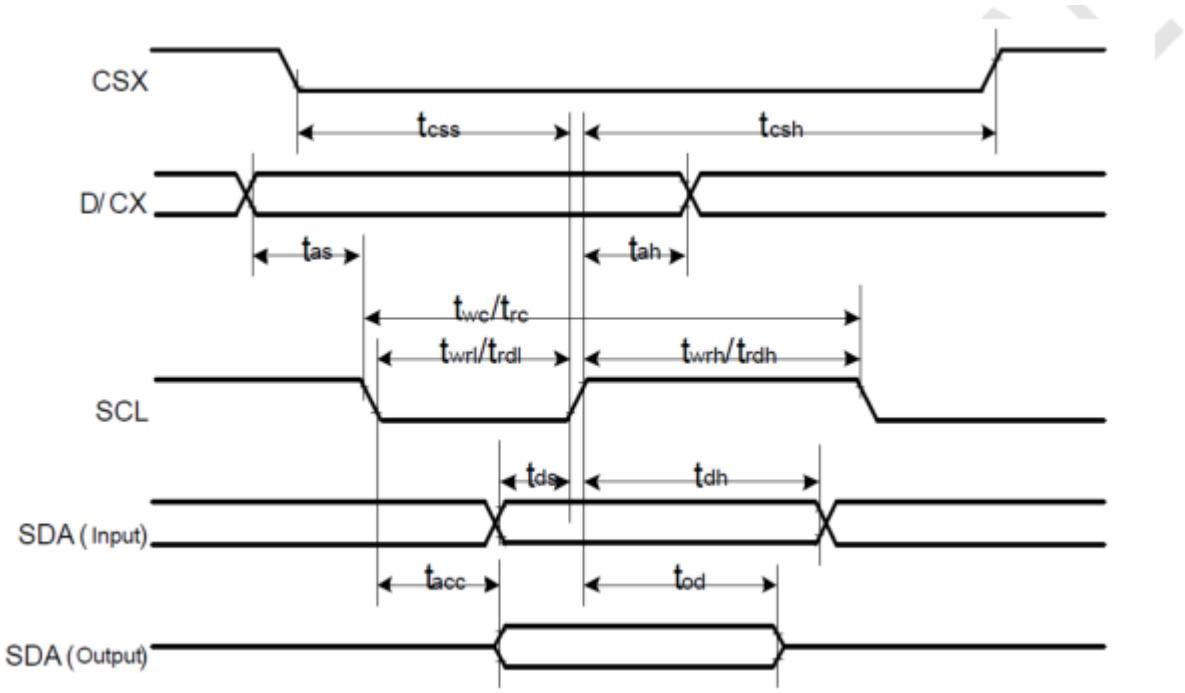

Signal	Symbol	Parameter	Min	Max	Unit	Description
CSX	tcss	Chip select time(Write)	30	-	ns	
	tcsh	Chip select hold time(write)	30	-	ns	
SCL	twc	Serial clock cycle (Write)	100	-	ns	
	twrh	SCL "H" pulse width (Write)	35	-	ns	
	twrl	SCL "L" pulse width (Write)	35	-	ns	
	trc	Serial clock cycle (Read)	150	-	ns	
	trdh	SCL "H" pulse width (Read)	60	-	ns	
	trdl	SCL "L" pulse width (Read)	60	-	ns	
D/CX	tas	D/CX setup time	10	-		
	tah	D/CX hold time(Write / Read)	10	-		
SDA (Input)	tds	Data setup time(Write)	30	-	ns	
	tdh	Data hold time(Write)	30	-	ns	
SDA (Output)	tacc	Access time(Read)	-	50	ns	For maximum CL=30pFFor minimum CL=8pF
	tod	Output disable time(Read)	15	50	ns	

Note: VSS=0V, Ta=25°C

3.3 8080 Mode System Bus Timing

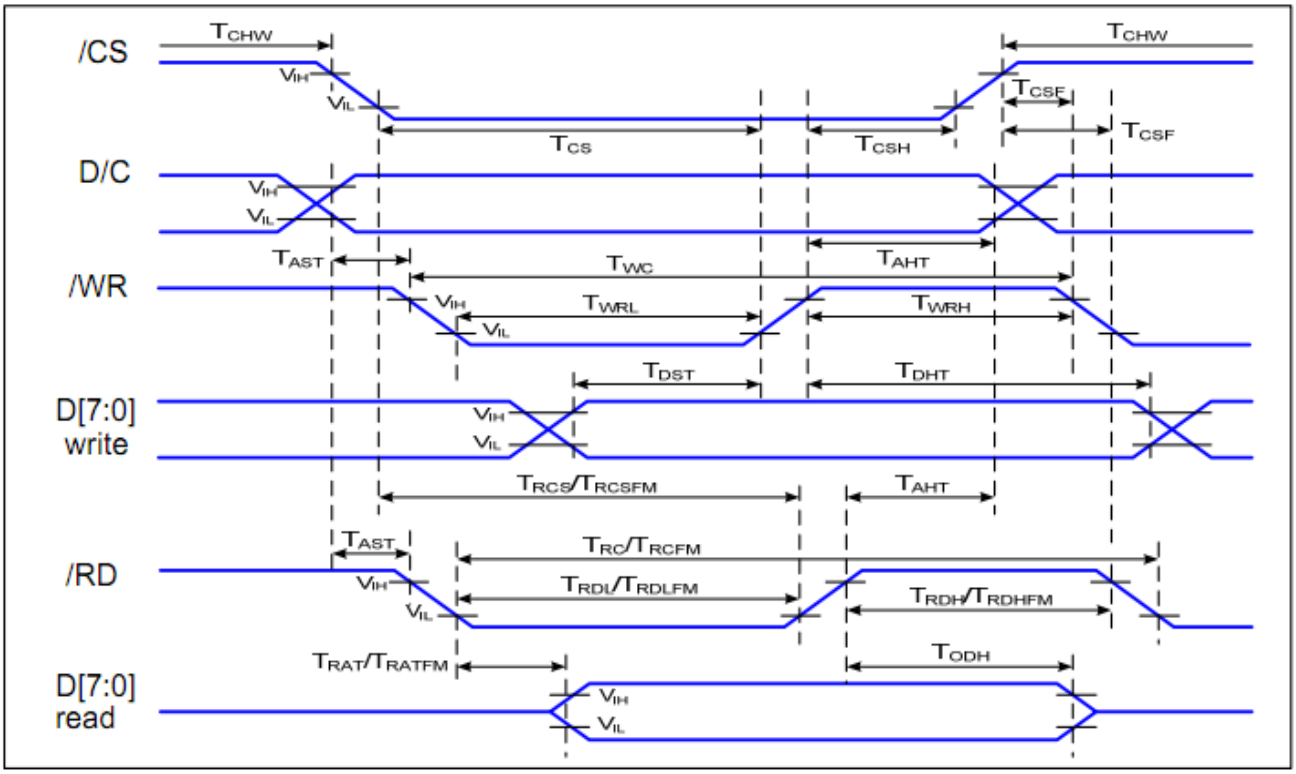

Singal	Symbol	Parameter	Min.	MAX.	Unit	Description
D/C	T_{AST}	Address setup time	0	-	ns	
	T_{AHT}	Address hold time (Write/Read)	10	-	ns	
/CS	T_{CHW}	CSX “H” pulse width	0	-	ns	
	T_{CS}	Chip Select setup time (Write)	15	-	ns	
	T_{RCS}	Chip Select setup time (Read ID)	45	-	ns	
	T_{RCSFM}	Chip Select setup time (Read FM)	355	-	ns	
	T_{CSF}	Chip Select Wait time (Write/Read)	10	-	ns	
/WR	T_{WC}	Write cycle	66	-	ns	
	T_{WRH}	Write Control pulse H duration	15	-	ns	
	T_{WRL}	Write Control pulse L duration	15	-	ns	
/RD (FM)	T_{RCFM}	Read Cycle (FM)	450	-	ns	
	T_{RDHFM}	Read Control H duration (FM)	90	-	ns	
	T_{RDLFM}	Read Control L duration (FM)	355	-	ns	
/RD (ID)	T_{RC}	Read cycle (ID)	160	-	ns	
	T_{RDH}	Read Control pulse H duration	90	-	ns	
	T_{RDL}	Read Control pulse L duration	45	-	ns	
D[7:0]	T_{DST}	Write data setup time	10	-	ns	For maximum CL=30pF For minimum CL=8pF
	T_{DHT}	Write data hold time	10	-	ns	
	T_{RAT}	Read access time	-	40	ns	
	T_{RATFM}	Read access time	-	340	ns	
	T_{ROD}	Read output disable time	20	80	ns	

Note: GND=0V, TOP=25°C

3.4 Reset Timing

During power off, if LCD is in the Sleep Out mode, VCI and IOVCC must be powered down minimum 120msec after RESX has been released.

During power off, if LCD is in the Sleep In mode, IOVCC or VCI can be powered down minimum 0msec after RESX has been released.

4. Display Commands

Regulative Command Set													
Command Function	D/CX	RDX	WRX	D17-8	D7	D6	D5	D4	D3	D2	D1	D0	Hex
No Operation	0	1	↑	XX	0	0	0	0	0	0	0	0	00h
Software Reset	0	1	↑	XX	0	0	0	0	0	0	0	1	01h
Read Display Identification Information	0	1	↑	XX	0	0	0	0	0	1	0	0	04h
	1	↑	1	XX	X	X	X	X	X	X	X	X	XX
	1	↑	1	XX	ID1 [7:0]								E3
	1	↑	1	XX	ID2 [7:0]								00
	1	↑	1	XX	ID3 [7:0]								00
Read Display Status	0	1	↑	XX	0	0	0	0	1	0	0	1	09h
	1	↑	1	XX	X	X	X	X	X	X	X	X	XX
	1	↑	1	XX	D [31:25]							X	00
	1	↑	1	XX	X	D [22:20]			D [19:16]				61
	1	↑	1	XX	X	X	X	X	X	D [10:8]			00
	1	↑	1	XX	D [7:5]			X	X	X	X	X	00
Read Display Power Mode	0	1	↑	XX	0	0	0	0	1	0	1	0	0Ah
	1	↑	1	XX	X	X	X	X	X	X	X	X	XX
	1	↑	1	XX	D [7:2]						0	0	08
Read Display MADCTL	0	1	↑	XX	0	0	0	0	1	0	1	1	0Bh
	1	↑	1	XX	X	X	X	X	X	X	X	X	XX
	1	↑	1	XX	D [7:2]						0	0	00
Read Display Pixel Format	0	1	↑	XX	0	0	0	0	1	1	0	0	0Ch
	1	↑	1	XX	X	X	X	X	X	X	X	X	XX
	1	↑	1	XX	X	DPI [2:0]			X	DBI [2:0]			06
Read Display Image Format	0	1	↑	XX	0	0	0	0	1	1	0	1	0Dh
	1	↑	1	XX	X	X	X	X	X	X	X	X	XX
	1	↑	1	XX	X	X	X	X	X	D [2:0]			00
Read Display Signal Mode	0	1	↑	XX	0	0	0	0	1	1	1	0	0Eh
	1	↑	1	XX	X	X	X	X	X	X	X	X	XX
	1	↑	1	XX	D [7:2]						0	0	00
Read Display Self-Diagnostic Result	0	1	↑	XX	0	0	0	0	1	1	1	1	0Fh
	1	↑	1	XX	X	X	X	X	X	X	X	X	XX
	1	↑	1	XX	D [7:6]		X	X	X	X	X	X	00
Enter Sleep Mode	0	1	↑	XX	0	0	0	1	0	0	0	0	10h
Sleep OUT	0	1	↑	XX	0	0	0	1	0	0	0	1	11h
Partial Mode ON	0	1	↑	XX	0	0	0	1	0	0	1	0	12h
Normal Display Mode ON	0	1	↑	XX	0	0	0	1	0	0	1	1	13h
Display Inversion OFF	0	1	↑	XX	0	0	1	0	0	0	0	0	20h
Display Inversion ON	0	1	↑	XX	0	0	1	0	0	0	0	1	21h
Gamma Set	0	1	↑	XX	0	0	1	0	0	1	1	0	26h
	1	1	↑	XX	GC [7:0]								01
Display OFF	0	1	↑	XX	0	0	1	0	1	0	0	0	28h
Display ON	0	1	↑	XX	0	0	1	0	1	0	0	1	29h
Column Address Set	0	1	↑	XX	0	0	1	0	1	0	1	0	2Ah
	1	1	↑	XX	SC [15:8]								XX
	1	1	↑	XX	SC [7:0]								XX
	1	1	↑	XX	EC [15:8]								XX
	1	1	↑	XX	EC [7:0]								XX
Page Address Set	0	1	↑	XX	0	0	1	0	1	0	1	1	2Bh
	1	1	↑	XX	SP [15:8]								XX
	1	1	↑	XX	SP [7:0]								XX
	1	1	↑	XX	EP [15:8]								XX
	1	1	↑	XX	EP [7:0]								XX

Memory Write	0	1	↑	XX	0	0	1	0	1	1	0	0	2Ch
	1	1	↑	D [17:0]									XX
Color SET	0	1	↑	XX	0	0	1	0	1	1	0	1	2Dh
	1	1	↑	XX	R00 [5:0]								XX
	1	1	↑	XX	Rnn [5:0]								XX
	1	1	↑	XX	R31 [5:0]								XX
	1	1	↑	XX	G00 [5:0]								XX
	1	1	↑	XX	Gnn [5:0]								XX
	1	1	↑	XX	G63 [5:0]								XX
	1	1	↑	XX	B00 [5:0]								XX
	1	1	↑	XX	Bnn [5:0]								XX
	1	1	↑	XX	B31 [5:0]								XX
Memory Read	0	1	↑	XX	0	0	1	0	1	1	1	0	2Eh
	1	↑	1	XX	X	X	X	X	X	X	X	X	XX
	1	↑	1	D [17:0]									XX
Partial Area	0	1	↑	XX	0	0	1	1	0	0	0	0	30h
	1	1	↑	XX	SR [15:8]								00
	1	1	↑	XX	SR [7:0]								00
	1	1	↑	XX	ER [15:8]								00
	1	1	↑	XX	ER [7:0]								EF
Vertical Scrolling Definition	0	1	↑	XX	0	0	1	1	0	0	1	1	33h
	1	1	↑	XX	TFA [15:8]								00
	1	1	↑	XX	TFA [7:0]								00
	1	1	↑	XX	VSA [15:8]								00
	1	1	↑	XX	VSA [7:0]								F0
	1	1	↑	XX	BFA [15:8]								00
	1	1	↑	XX	BFA [7:0]								00
Tearing Effect Line OFF	0	1	↑	XX	0	0	1	1	0	1	0	0	34h
Tearing Effect Line ON	0	1	↑	XX	0	0	1	1	0	1	0	1	35h
	1	1	↑	XX	X	X	X	X	X	X	X	M	00
Memory Access Control	0	1	↑	XX	0	0	1	1	0	1	1	0	36h
	1	1	↑	XX	MY	MX	MV	ML	BGR	MH	X	X	00
Vertical Scrolling Start Address	0	1	↑	XX	0	0	1	1	0	1	1	1	37h
	1	1	↑	XX	VSP [15:8]								00
	1	1	↑	XX	VSP [7:0]								00
Idle Mode OFF	0	1	↑	XX	0	0	1	1	1	0	0	0	38h
Idle Mode ON	0	1	↑	XX	0	0	1	1	1	0	0	1	39h
Pixel Format Set	0	1	↑	XX	0	0	1	1	1	0	1	0	3Ah
	1	1	↑	XX	X	DPI [2:0]			X	DBI [2:0]			66
Set Tear Scanline	0	1	↑	XX	0	1	0	0	0	1	0	0	44h
	1	1	↑	XX	X	X	X	X	X	X	X	STS [8]	00
	1	1	↑	XX	STS [7:0]								00
Get Scanline	0	1	↑	XX	0	1	0	0	0	1	0	1	45h
	1	↑	1	XX	X	X	X	X	X	X	X	X	XX
	1	↑	1	XX	X	X	X	X	X	X	GTS [9]	GTS [8]	00
	1	↑	1	XX	GTS [7:0]								00
Write Display Brightness	0	1	↑	XX	0	1	0	1	0	0	0	1	51h
	1	1	↑	XX	DBV [7:0]								00

Read Display Brightness	0	1	↑	XX	0	1	0	1	0	0	1	0	52h
	1	↑	1	XX	X	X	X	X	X	X	X	X	XX
	1	↑	1	XX	DBV [7:0]								00
Write CTRL Display	0	1	↑	XX	0	1	0	1	0	0	1	1	53h
	1	1	↑	XX	X	X	BCTRL	X	DD	BL	X	X	00
Read CTRL Display	0	1	↑	XX	0	1	0	1	0	1	0	0	54h
	1	↑	1	XX	X	X	X	X	X	X	X	X	XX
	1	↑	1	XX	X	X	BCTRL	X	DD	BL	X	X	00
Write Content Adaptive Brightness Control	0	1	↑	XX	0	1	0	1	0	1	0	1	55h
	1	1	↑	XX	X	X	X	X	X	X	C [1:0]		00
Read Content Adaptive Brightness Control	0	1	↑	XX	0	1	0	1	0	1	1	0	56h
	1	↑	1	XX	X	X	X	X	X	X	X	X	XX
	1	↑	1	XX	X	X	X	X	X	X	C [1:0]		00
Write CABC Minimum Brightness	0	1	↑	XX	0	1	0	1	1	1	1	0	5Eh
	1	1	↑	XX	CMB [7:0]								00
Read CABC Minimum Brightness	0	1	↑	XX	0	1	0	1	1	1	1	1	5Fh
	1	↑	1	XX	X	X	X	X	X	X	X	X	XX
	1	↑	1	XX	CMB [7:0]								00
Read Automatic Brightness Control Self-Diagnostic Result	0	1	↑	XX	0	1	1	0	1	0	0	0	68H
	1	↑	1	XX	X	X	X	X	X	X	X	X	XX
	1	↑	1	XX	D7	D6	X	X	X	X	X	X	00
Read ID1	0	1	↑	XX	1	1	0	1	1	0	1	0	DAh
	1	↑	1	XX	X	X	X	X	X	X	X	X	XX
	1	↑	1	XX	Module's Manufacture [7:0]								E3
Read ID2	0	1	↑	XX	1	1	0	1	1	0	1	1	DBh
	1	↑	1	XX	X	X	X	X	X	X	X	X	XX
	1	↑	1	XX	LCD Module / Driver Version [7:0]								XX
Read ID3	0	1	↑	XX	1	1	0	1	1	1	0	0	DCh
	1	↑	1	XX	X	X	X	X	X	X	X	X	XX
	1	↑	1	XX	LCD Module / Driver ID [7:0]								XX

Extended Command Set													
Command Function	D/CX	RDX	WRX	D17-8	D7	D6	D5	D4	D3	D2	D1	D0	Hex
RGB Interface Signal Control	0	1	↑	XX	1	0	1	1	0	0	0	0	B0h
	1	1	↑	XX	ByPass_MODE	RCM [1:0]		X	VSPL	HSPL	DPL	EPL	40
Frame Control (In Normal Mode)	0	1	↑	XX	1	0	1	1	0	0	0	1	B1h
	1	1	↑	XX	X	X	X	X	X	X	DIVA [1:0]		00
	1	1	↑	XX	X	X	X	RTNA [4:0]					1C
Frame Control (In Idle Mode)	0	1	↑	XX	1	0	1	1	0	0	1	0	B2h
	1	1	↑	XX	X	X	X	X	X	X	DIVB [1:0]		00
	1	1	↑	XX	X	X	X	RTNB [4:0]					1C
Frame Control (In Partial Mode)	0	1	↑	XX	1	0	1	1	0	0	1	1	B3h
	1	1	↑	XX	X	X	X	X	X	X	DIVC [1:0]		00
	1	1	↑	XX	X	X	X	RTNC [4:0]					1C
Display Inversion Control	0	1	↑	XX	1	0	1	1	0	1	0	0	B4h
	1	1	↑	XX	X	X	X	X	X	X	DINV[1:0]		00
Blanking Porch Control	0	1	↑	XX	1	0	1	1	0	1	0	1	B5h
	1	1	↑	XX	0	VFP [6:0]							02
	1	1	↑	XX	0	VBP [6:0]							02
	1	1	↑	XX	0	HFP [6:0]							0A
	1	1	↑	XX	0	HBP [6:0]							14

Display Function Control	0	1	↑	XX	1	0	1	1	0	1	1	0	B6h

	1	1	↑	XX	X	X	X	X	PTG [1:0]		PT [1:0]		0A
	1	1	↑	XX	REV	GS	SS	SM	ISC [3:0]				80
	1	1	↑	XX	X	X	NL [5:0]						1D
	1	1	↑	XX	X	X	PCDIV [5:0]						04
Entry Mode Set	0	1	↑	XX	1	0	1	1	0	1	1	1	B7h
	1	1	↑	XX	X	X	X	X	X	GON	DTE	GAS	07
Backlight Control 1	0	1	↑	XX	1	0	1	1	1	0	0	0	B8h
	1	1	↑	XX	X	X	X	X	X	X	X	X	XX
	1	1	↑	XX	X	X	X	X	TH_UI [3:0]				0B
Backlight Control 2	0	1	↑	XX	1	0	1	1	1	0	0	1	B9h
	1	1	↑	XX	X	X	X	X	X	X	X	X	XX
	1	1	↑	XX	TH_MV [3:0]				TH_ST [3:0]				BB
Backlight Control 3	0	1	↑	XX	1	0	1	1	1	0	1	0	BAh
	1	1	↑	XX	X	X	X	X	X	X	X	X	XX
	1	1	↑	XX	X	X	X	X	DTH_UI [3:0]				04
Backlight Control 4	0	1	↑	XX	1	0	1	1	1	0	1	1	BBh
	1	1	↑	XX	X	X	X	X	X	X	X	X	XX
	1	1	↑	XX	DTH_MV [3:0]				DTH_ST [3:0]				A8
Backlight Control 5	0	1	↑	XX	1	0	1	1	1	1	0	0	BCh
	1	1	↑	XX	X	X	X	X	X	X	X	X	XX
	1	1	↑	XX	DIM2 [3:0]				X	DIM1 [2:0]			43
Backlight Control 6	0	1	↑	XX	1	0	1	1	1	1	0	1	BDh
	1	1	↑	XX						LEDONR	LEDONPOL	LEDPWMOPL	00
Backlight Control 7	0	1	↑	XX	1	0	1	1	1	1	1	0	BEh
	1	1	↑	XX	PWM_DIV[7:0]								D0
Power Control 1	0	1	↑	XX	1	1	0	0	0	0	0	0	C0h
	1	1	↑	XX	X	X	X	VRH1 [4:0]					09
	1	1	↑	XX	X	X	X	VRH2 [4:0]					09
Power Control 2	0	1	↑	XX	1	1	0	0	0	0	0	1	C1h
	1	1	↑	XX	0	VC[2:0]			0	BT [2:0]			00
Power Control 3 (For Normal Mode)	0	1	↑	XX	1	1	0	0	0	0	1	0	C2h
	1	1	↑	XX	1	DCA1 [2:0]			0	DCA0 [2:0]			B2
Power Control 4 (For Idle Mode)	0	1	↑	XX	1	1	0	0	0	0	1	1	C3h
	1	1	↑	XX	1	DCB1 [2:0]			0	DCB0 [2:0]			B2
Power Control 5 (For Partial Mode)	0	1	↑	XX	1	1	0	0	0	1	0	0	C4h
	1	1	↑	XX	1	DCC1 [2:0]			0	DCC0 [2:0]			B2
VCOM Control 1	0	1	↑	XX	1	1	0	0	0	1	0	1	C5h
	1	1	↑	XX	nVM	VCM[6:0]							F2
Get GPIO0~7 Status	0	1	↑	XX	1	1	0	0	0	1	1	0	C6h
	1	↑	1	XX	X	X	X	X	X	X	X	X	XX
	1	↑	1	XX	GPI [7:0]								00
Set GPIO0~7 Status	0	1	↑	XX	1	1	0	0	0	1	1	1	C7h
	1	1	↑	XX	GPO[7:0]								00
	1	1	↑	XX	X	X	X	X	X	X	IE	OEB	02
Set EXTC	0	1	↑	XX	1	1	0	0	1	0	0	0	C8h
	1	1	↑	XX	EXTC1[7:0]								FF
	1	1	↑	XX	EXTC2[7:0]								93
	1	1	↑	XX	EXTC3[7:0]								42
NV Memory Write	0	1	↑	XX	1	1	0	1	0	0	0	0	D0h
	1	1	↑	XX	X	X	X	X	PGM_ADR [3:0]				00
	1	1	↑	XX	PGM_DATA [7:0]								XX
NV Memory Protection Key	0	1	↑	XX	1	1	0	1	0	0	0	1	D1h
	1	1	↑	XX	KEY [23:16]								55
	1	↓	↑	XX	KEY [15:8]								AA
	1	↓	↑	XX	KEY [7:0]								66

NV Memory Status Read	0	↓	↑	XX	1	1	0	1	0	0	1	0	D2h
	1	↑	↓	XX	X	X	X	X	X	X	X	X	XX
	1	↑	↓	XX	MADCTL_CNT [1:0]		ID3_CNT [1:0]		ID2_CNT [1:0]		ID1_CNT [1:0]		XX
	1	↑	↓	XX	BUSY	X	X	X	X	VMF_CNT [2:0]			XX
Read ID4	0	↓	↑	XX	1	1	0	1	0	0	1	1	D3h
	1	↑	↓	XX	X	X	X	X	X	X	X	X	XX
	1	↑	↓	XX	0	0	0	0	0	0	0	0	00
	1	↑	↓	XX	1	0	0	1	0	0	1	1	93
	1	↑	↓	XX	0	1	0	0	0	0	1	0	42
Get External Register by SPI	0	1	↑	XX	1	1	0	1	1	0	0	1	D9h
	1	1	↑	XX	X	X	X	ENSPI	SPI_EXT_ORD [3:0]				00
Positive Gamma Correction	0	1	↑	XX	1	1	1	0	0	0	0	0	E0h
	1	1	↑	XX	X	X	X	X	VP0 [3:0]				00
	1	1	↑	XX	X	X	VP1 [5:0]						05
	1	1	↑	XX	X	X	VP2 [5:0]						08
	1	1	↑	XX	X	X	X	X	VP4 [3:0]				04
	1	1	↑	XX	X	X	X	VP6 [4:0]					13
	1	1	↑	XX	X	X	X	X	VP13 [3:0]				0A
	1	1	↑	XX	X	VP20 [6:0]							34
	1	1	↑	XX	VP36 [3:0]				VP27 [3:0]				8A
	1	1	↑	XX	X	VP43 [6:0]							46
	1	1	↑	XX	X	X	X	X	VP50 [3:0]				07
	1	1	↑	XX	X	X	X	VP57 [4:0]					0E
	1	1	↑	XX	X	X	X	X	VP59 [3:0]				0A
	1	1	↑	XX	X	X	VP61 [5:0]						1B
	1	1	↑	XX	X	X	VP62 [5:0]						1D
	1	1	↑	XX	X	X	X	X	VP63 [3:0]				0F
Negative Gamma CorrectionE	0	1	↑	XX	1	1	1	0	0	0	0	1	E1h
	1	1	↑	XX	X	X	X	X	VN0 [4:0]				00
	1	1	↑	XX	X	X	VN1 [5:0]						22
	1	1	↑	XX	X	X	VN2 [5:0]						25
	1	1	↑	XX	X	X	X	X	VN4 [3:0]				04
	1	1	↑	XX	X	X	X	VN6 [4:0]					0F
	1	1	↑	XX	X	X	X	X	VN13 [3:0]				06
	1	1	↑	XX	X	VN20 [6:0]							38
	1	1	↑	XX	VN36 [3:0]				VN27 [3:0]				56
	1	1	↑	XX	X	VN43 [6:0]							4B
	1	1	↑	XX	X	X	X	X	VN50 [3:0]				05
	1	1	↑	XX	X	X	X	VN57 [4:0]					0C
	1	1	↑	XX	X	X	X	X	VN59 [3:0]				0A
	1	1	↑	XX	X	X	VN61 [5:0]						37
	1	1	↑	XX	X	X	VN62 [5:0]						3A
	1	1	↑	XX	X	X	X	X	VN63 [4:0				0F
Digital Gamma Control 1	0	1	↑	XX	1	1	1	0	0	0	1	0	E2h
1st Parameter	1	1	↑	XX	RCA0 [3:0]				BCA0 [3:0]				XX
:	1	1	↑	XX	RCAx [3:0]				BCAx [3:0]				XX
16th Parameter	1	1	↑	XX	RCA15 [3:0]				BCA15 [3:0]				XX
Digital Gamma Control 2	0	1	↑	XX	1	1	1	0	0	0	1	1	E3h
1st Parameter	1	1	↑	XX	RFA0 [3:0]				BFA0 [3:0]				XX
:	1	1	↑	XX	RFAx [3:0]				BFAx [3:0]				XX
64th Parameter	1	1	↑	XX	RFA63 [3:0]				BFA63 [3:0]				XX
Interface Control	0	1	↑	XX	1	1	1	1	0	1	1	0	F6h
	1	1	↑	XX	MY_EOR	MX_EOR	MV_EOR	X	BGR_EOR	X	X	WEMODE	01
	1	1	↑	XX	X	X	EPF [1:0]		X	X	MDT [1:0]		00
	1	1	↑	XX	X	X	ENDIAN	X	DM [1:0]		RM	RIM	00

Note: For more information and details please refer to LCD controller (ILI9342C) datasheet.

5. Optical Characteristics

Item		Symbol	Condition	Min	Typ	Max	Unit	Remark
View Angles		θT	CR≧10	70	80	-	Degree	Note2,3
		θB		70	80	-		
		θL		70	80	-		
		θR		70	80	-		
Contrast Ratio		CR	θ= 0°	600	800	-		Note 3
Response Time		T_{ON}	25℃	-	30	40	ms	Note 4
		T_{OFF}						
Chromaticity	**White**	x	Backlight is on	0.252	0.302	0.352		Note 1,5
		y		0.265	0.315	0.365		
	Red	x		0.575	0.625	0.675		Note 1,5
		y		0.271	0.321	0.371		
	Green	x		0.275	0.325	0.375		Note 1,5
		y		0.577	0.627	0.677		
	Blue	x		0.107	0.157	0.207		Note 1,5
		y		-0.005	0.045	0.095		
Uniformity		U	-	75	80	-	%	Note 6
NTSC			-	65	70	-	%	Note 5
Luminance		L	-	250	300	-	cd/㎡	Note 7

Test Conditions:

1.I_{LEDA}= 20mA(every LED), and the ambient temperature is 25℃.

2. The test systems refer to Note 1 and Note 2.

Note 1: : reference Figure1
The optical characteristics should be measured in dark room. After 5 Minutes operation, the optical properties are measured at the center point of the LCD screen. All input terminals LCD panel must be ground when measuring the center area of the panel.
Measuring condition:
- Measuring surroundings: Dark room
- Measuring temperature: Ta=25℃.
- Adjust operating voltage to get optimum contrast at the center of the display.

Measured value at the center point of LCD panel after more than 5 minutes while backlight turning on.

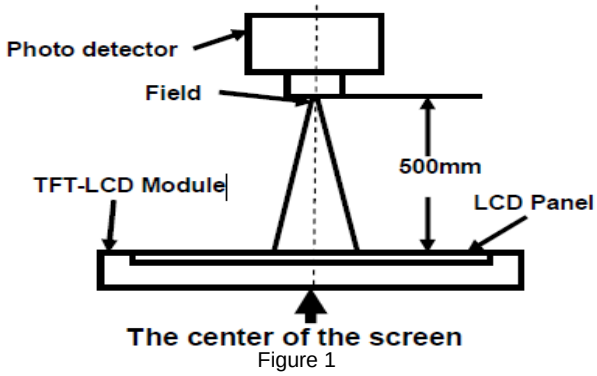

Figure 1

Note 2: reference Figure2
The luminance uniformity is calculated by using following formula.
△Bp = Bp (Min.) / Bp (Max.)×100 (%)
Bp (Max.) = Maximum brightness in 9 measured spots
Bp (Min.) = Minimum brightness in 9 measured spots.

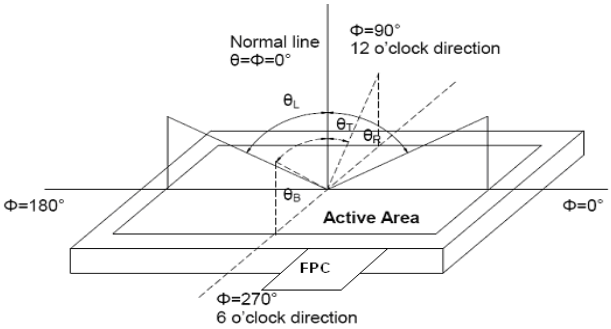

Figure 2

Note 3: reference Figure3
The definition of contrast ratio:

$$\text{ContrastRatio(CR)} = \frac{\text{Luminance When LCD is at "White" state}}{\text{Luminance When LCD is at "Black" state}}$$

(Contrast Ratio is measured in optimum common electrode voltage)
"White state ": The state is that the LCD should drive by Vwhite. "Black state": The state is that the LCD should drive by Vblack.Vwhite: TBD V Vblack: TBD V.

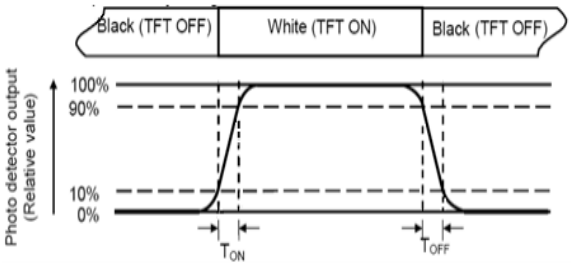

Figure 3

Note 4: Definition of Response time
The response time is defined as the LCD optical switching time interval between "White" state and "Black" state. Rise time (TON) is the time between photo detector output intensity changed from 90% to 10%. And fall time (TOFF) is the time between photo detector output intensity changed from 10% to 90%.

Note 5: Definition of color chromaticity (CIE1931)
Color coordinates measured at center point of LCD.

Note 6: Definition of Luminance Uniformity Figure4
Active area is divided into 9 measuring areas (Refer Fig. 2). Every measuring point is placed at the center of each measuring area.
Luminance Uniformity (U) = Lmin/ Lmax
L-------Active area diameter,
W----- Active area width
Lmax: The measured Maximum luminance of all measurement position.
Lmin: The measured Minimum luminance of all measurement position.

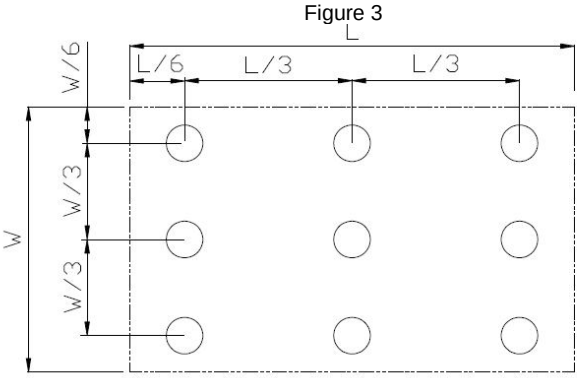

Figure 4

Note 7: Definition of Luminance:
Measure the luminance of white state at center point.

6. LCD Module Design and Handling Precautions

- Please ensure V0, VCOM is adjustable, to enable LCD module get the best contrast ratio under different temperatures, view angles and positions.
- Normally display quality should be judged under the best contrast ratio within viewable area. Unexpected display pattern may com out under abnormal contrast ratio.
- Never operate the LCD module exceed the absolute maximum ratings.
- Never apply signal to the LCD module without power supply.
- Keep signal line as short as possible to reduce external noise interference.
- IC chip (e.g. TAB or COG) is sensitive to light. Strong light might cause malfunction. Light sealing structure casing is recommended.
- Make sure there is enough space (with cushion) between case and LCD panel, to prevent external force passed on to the panel; otherwise that may cause damage to the LCD and degrade its display result.
- Avoid showing a display pattern on screen for a long time (continuous ON segment).
- LCD module reliability may be reduced by temperature shock.
- When storing and operating LCD module, avoids exposure to direct sunlight, high humidity, high or low temperature. They may damage or degrade the LCD module.
- Never leave LCD module in extreme condition (max./min storage/operate temperature) for more than 48hr.
- Recommend LCD module storage conditions is 0 C~40 C <80%RH.
- LCD module should be stored in the room without acid, alkali and harmful gas.
- Avoid dropping & violent shocking during transportation, and no excessive pressure press, moisture and sunlight.
- LCD module can be easily damaged by static electricity. Please maintain an optimum anti-static working environment to protect the LCD module. (eg. ground the soldering irons properly)
- Be sure to ground the body when handling LCD module.
- Only hold LCD module by its sides. Never hold LCD module by applying force on the heat seal or TAB.
- When soldering, control the temperature and duration avoid damaging the backlight guide or diffuser which might degrade the display result such as uneven display.
- Never let LCD module contact with corrosive liquids, which might cause damage to the backlight guide or the electric circuit of LCD module.
- Only clean LCD with a soft dry cloth, Isopropyl Alcohol or Ethyl Alcohol. Other solvents (e.g. water) may damage the LCD.
- Never add force to components of LCD module. It may cause invisible damage or degrade the module's reliability.
- When mounting LCD module, please make sure it is free from twisting, warping and bending.

6. 液晶显示模块设计和使用须知

- 请注意 V0, VCOM 的设定，以确保液晶显示模块在不同的使用温度下以及在不同的视角和位置观察模块显示，均能达到最佳对比度，请务必将应用电路上设置为对比度可调。
- 请注意液晶显示模块的显示品质判定是指在正常对比度下以及视窗(V.A)范围内进行的，非正常对比度下液晶可能会出现非预期的显示不良，应注意区分。
- 请勿在最大额定值以外使用液晶显示模块。
- 请勿在没有接通电源的条件下，给液晶显示模块输送信号。
- 请尽可能缩短信号线的连接，以避免对液晶显示模块的信号干扰。
- 集成电路因 IC 芯片(如 TAB 或 COG)对紫外线极为敏感，强光环境下可能会引起液晶显示模块功能失效，故应采用不透光的外壳。
- 请在液晶显示模块与外壳之间保留足够的空间(可使用衬垫)，以缓冲外力对液晶显示模块的损坏或因受力不均而产生的显示不匀等异常现象。
- 避免液晶显示屏在某一画面下长时间点亮，否则有出现残影的风险；请通过软件每隔一段时间改变一次画面。
- 液晶显示模块的可靠性可能因温度冲击而降低。
- 请勿在阳光直射、高湿、高温或低温下储存和使用液晶显示模块，这将造成液晶显示模块的损坏或失效。
- 请勿在极限环境(最大/最小存储/工作温度)下使用或放置液晶显示模块超过 48 小时以上。
- 液晶显示模块建议存储条件为: 0 C~40 C <80%RH。
- 请勿让液晶显示模块存储于带有 酸性，碱性，有害气体环境之中。
- 在运输过程中，请勿让液晶显示模块跌落与猛烈震动，同时避免 异常挤压，高湿度，与阳光照射.
- 液晶显示模块极易受静电损坏，请务必保证液晶显示模块在防静电的工作环境中使用或保存。(如: 烙铁正确接地,等)
- 拿取液晶显示模块时需注意操作人员的接地情况。
- 请手持液晶显示模块的边沿取放模块，防止热压纸或 TAB 部位受力。
- 焊接液晶模块时，请注意控制烙铁的温度、焊接时间，以免烫坏导光板或偏光片，导致显示不匀等不良现象发生。
- 请勿使用洗板水等腐蚀性液体接触液晶模块，以免腐蚀导光板或模块电路。
- 仅可使用柔软的干布，异丙醇或乙醇清洁液晶屏表面，其他任何溶剂(如:水)都有可能损坏液晶模块。
- 请勿挤压液晶显示模块上的元器件，以避免产生潜在的损坏或失效而影响产品可靠性。
- 装配液晶显示模块时，请务必注意避免液晶显示模块的扭曲或变形。

- Do not add excessive force on surface of LCD, which may cause the display color change abnormally.
- LCD panel is made with glass. Any mechanical shock (e.g. dropping from high place) will damage the LCD module.
- Protective film is attached on LCD screen. Be careful when peeling off this protective film, since static electricity may be generated.
- Polarizer on LCD gets scratched easily. If possible, do not remove LCD protective film until the last step of installation.
- When peeling off protective film from LCD, static charge may cause abnormal display pattern. The symptom is normal, and it will turn back to normal in a short while.

- LCD panel has sharp edges, please handle with care.
- Never attempt to disassemble or rework LCD module.
- If display panel is damaged and liquid crystal substance leaks out, be sure not to get any in your mouth, if the substance comes into contact with your skin or clothes promptly wash it off using soap and water.

- 请勿挤压液晶显示屏表面，这将导致显示颜色的异常。
- 液晶屏由玻璃制作而成，任何机械碰撞(如从高处跌落)均有可能损坏液晶显示模块。
- 液晶屏表面带有保护膜，揭除保护膜时需要注意可能产生的静电。
- 因液晶显示屏表面的偏光片极易划伤，安装完成之前请尽量不要揭下保护膜。
- 请缓慢揭除保护膜，在此过程中液晶显示屏上可能会产生静电线，此为正常情况，可在短时间内消失。

- 请注意避免被液晶显示屏的边缘割伤。
- 请不要试图拆卸或改造液晶显示模块。
- 当液晶显示屏出现破裂，内部液晶液体可能流出；相关液体不可吞吃，绝对不可接触嘴巴，如接触到皮肤或衣服，请使用肥皂与清水彻底清洗.

Warranty

This product has been manufactured to our company's specifications as a part for use in your company's general electronic products. It is guaranteed to perform according to delivery specifications. For any other use apart from general electronic equipment, we cannot take responsibility if the product is used in medical devices, nuclear power control equipment, aerospace equipment, fire and security systems, or any other applications in which there is a direct risk to human life and where extremely high levels of reliability are required. If the product is to be used in any of the above applications, we will need to enter into a separate product liability agreement.

- We cannot accept responsibility for any defect, which may arise form additional manufacturing of the product (including disassembly and reassembly), after product delivery.
- We cannot accept responsibility for any defect, which may arise after the application of strong external force to the product.
- We cannot accept responsibility for any defect, which may arise due to the application of static electricity after the product has passed our company's acceptance inspection procedures.
- When the product is in CCFL models, CCFL service life and brightness will vary according to the performance of the inverter used, leaks, etc. We cannot accept responsibility for product performance, reliability, or defect, which may arise.
- We cannot accept responsibility for intellectual property of a third part, which may arise through the application of our product to our assembly with exception to those issues relating directly to the structure or method of manufacturing of our product.

7. Outline Drawing

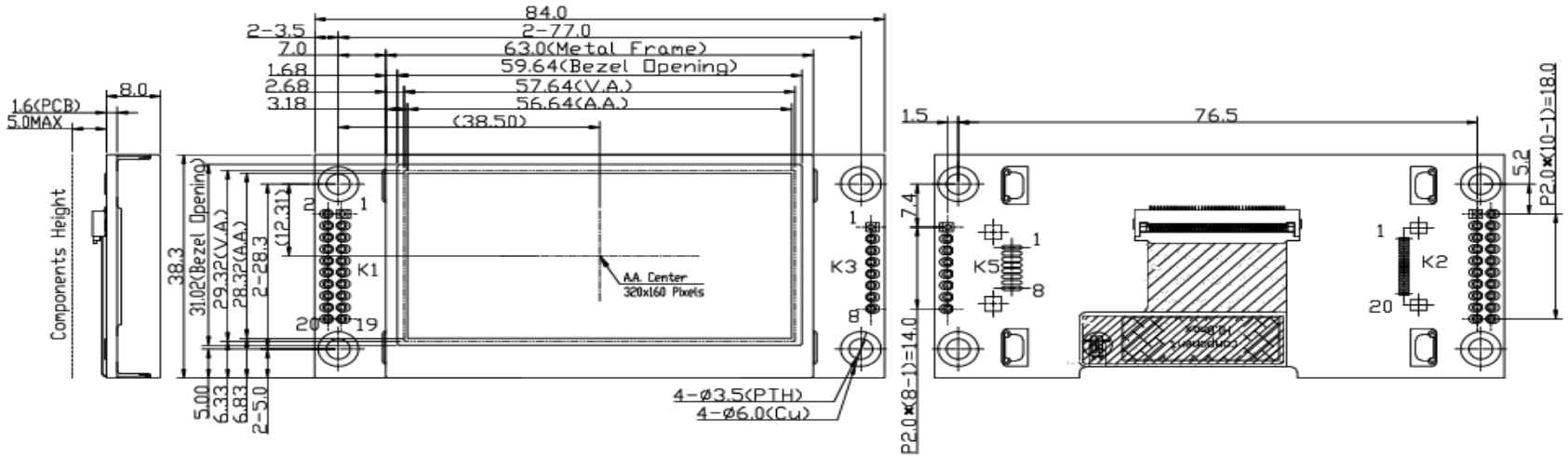

Teriminal K3\K5	
No.	Pin Name
1	GND
2	VDD
3	SI
4	SCL
5	D/C
6	/RES
7	/CS
8	BLEN

Teriminal K1\K2	
No.	Pin Name
1	NC(GND)
2	NC(GND)
3	NC(BLEN)
4	NC(VDD)
5	NC(VDD)
6	NC(/RD)
7	NC(/WR)
8	NC(D/C)
9	NC(/CS)
10	NC(D0)
11	NC(D1)
12	NC(D2)
13	NC(D3)
14	NC(D4)
15	NC(D5)
16	NC(D6)
17	NC(D7)
18	NC(/RES)
19	NC(FM)
20	NC

Note:
*1. LCD Display Type: TFT.Transmissive(Full View)
*2. Pixel Arrangment: RGB-STRIPE
*3. Color Depth : 262k Colors
*4. Operating Voltage : 5.0V
*5. Backlight: White LED
*6. Interface: SPI/MCU_8bits
*7. Operating Temperature : -20°C~70°C
*8. Storage Temperature : -30°C~80°C
*9. Unmarked Tolerace : ≤150,±0.3; >150,±0.5

A			
Rev	Note		Date
Dwg Title	LMT025ENPFWA-NAN Outline Dwg		
Dwg No.	MK-007659-1-1		Date 2022-04-19
Scale 1/1	Tol.	Unit mm	Paper Size A3
Approved	Checked	Drawn HeiYichen	

TOPWAY